Thank you for purchasing LS Variable Frequency Drives!

SAFETY INSTRUCTIONS

- Always follow safety instructions to prevent accidents and potential hazards from occurring.

- In this manual, safety messages are classified as follows:

⚠ **WARNING**	Improper operation may result in serious personal injury or death.
⚠ **CAUTION**	Improper operation may result in slight to medium personal injury or property damage.

- Throughout this manual we use the following two illustrations to make you aware of safety considerations:

⚠ Identifies potential hazards under certain conditions.
Read the message and follow the instructions carefully.

⚠ Identifies shock hazards under certain conditions.
Particular attention should be directed because dangerous voltage may be present.

- Keep operating instructions handy for quick reference.

- Read this manual carefully to maximize the performance of SV-iG5A series inverter and ensure its safe use.

⚠ WARNING

- **Do not remove the cover while power is applied or the unit is in operation.**
  Otherwise, electric shock could occur.

- **Do not run the inverter with the front cover removed.**
  Otherwise, you may get an electric shock due to high voltage terminals or charged capacitor exposure.

- **Do not remove the cover except for periodic inspections or wiring, even if the input power is not applied.**
  Otherwise, you may access the charged circuits and get an electric shock.

- **Wiring and periodic inspections should be performed at least 10 minutes after disconnecting the input power and after checking the DC link voltage is discharged with a meter (below DC 30V).**
  Otherwise, you may get an electric shock.

- **Operate the switches with dry hands.**
  Otherwise, you may get an electric shock.

- **Do not use the cable when its insulating tube is damaged.**
  Otherwise, you may get an electric shock.

- **Do not subject the cables to scratches, excessive stress, heavy loads or pinching.**
  Otherwise, you may get an electric shock.

⚠ CAUTION

- **Install the inverter on a non-flammable surface. Do not place flammable material nearby.**
  Otherwise, fire could occur.

- **Disconnect the input power if the inverter gets damaged.**
  Otherwise, it could result in a secondary accident and fire.

- **After the input power is applied or removed, the inverter will remain hot for a couple of minutes.**
  Otherwise, you may get bodily injuries such as skin-burn or damage.

- **Do not apply power to a damaged inverter or to an inverter with parts missing even if the installation is complete.**
  Otherwise, electric shock could occur.

- **Do not allow lint, paper, wood chips, dust, metallic chips or other foreign matter into the drive.**
  Otherwise, fire or accident could occur.

OPERATING PRECAUTIONS

(1) Handling and installation

- ☐ Handle according to the weight of the product.
- ☐ Do not stack the inverter boxes higher than the number recommended.
- ☐ Install according to instructions specified in this manual.
- ☐ Do not open the cover during delivery.
- ☐ Do not place heavy items on the inverter.
- ☐ Check the inverter mounting orientation is correct.
- ☐ Do not drop the inverter, or subject it to impact.
- ☐ Follow your national electrical code for grounding. Recommended Ground impedance for 400V class below 10 ohm.
- ☐ iG5A series contains ESD (Electrostatic Discharge) sensitive parts. Take protective measures against ESD before touching the pcb for inspection or installation.
- ☐ Use the inverter under the following environmental conditions:

Environment	Surrounding temperature	- 10 ~ 50 ℃ (non-freezing)
	Relative humidity	90% RH or less (non-condensing)
	Storage temperature	- 20 ~ 65 ℃
	Location	Protected from corrosive gas, combustible gas, oil mist or dust
	Altitude, Vibration	Max. 1,000m above sea level, Max. 5.9m/sec^2 (0.6G) or less
	Atmospheric pressure	70 ~ 106 kPa

(2) Wiring

- ☐ Do not connect a power factor correction capacitor, surge suppressor, or RFI filter to the output of the inverter.
- ☐ The connection orientation of the output cables U, V, W to the motor will affect the direction of rotation of the motor.
- ☐ Incorrect terminal wiring could result in the equipment damage.
- ☐ Reversing the polarity (+/-) of the terminals could damage the inverter.
- ☐ Only authorized personnel familiar with LS inverter should perform wiring and inspections.
- ☐ Always install the inverter before wiring. Otherwise, you may get an electric shock or have bodily injury.

(3) Trial run

- ☐ Check all parameters during operation. Changing parameter values might be required depending on the load.
- ☐ Always apply permissible range of voltage to the each terminal as indicated in this manual. Otherwise, it could lead to inverter damage.

(4) Operation precautions

- ☐ When the Auto restart function is selected, stay away from the equipment as a motor will restart suddenly after an alarm stop.
- ☐ The Stop key on the keypad is valid only when the appropriate function setting has been made. Prepare an emergency stop switch separately.
- ☐ If an alarm reset is made with the reference signal present, a sudden start will occur. Check that the reference signal is turned off in advance. Otherwise an accident could occur.
- ☐ Do not modify or alter anything inside the inverter.
- ☐ Motor might not be protected by electronic thermal function of inverter.
- ☐ Do not use a magnetic contactor on the inverter input for frequent starting/stopping of the inverter.
- ☐ Use a noise filter to reduce the effect of electromagnetic interference. Otherwise nearby electronic equipment may be affected.
- ☐ In case of input voltage unbalance, install AC reactor. Power Factor capacitors and generators may become overheated and damaged due to potential high frequency noise transmitted from inverter.
- ☐ Use an insulation-rectified motor or take measures to suppress the micro surge voltage when driving 400V class motor with inverter. A micro surge voltage attributable to wiring constant is generated at motor terminals, and may deteriorate insulation and damage motor.
- ☐ Before operating unit and prior to user programming, reset user parameters to default settings.
- ☐ Inverter can easily be set to high-speed operations, Verify capability of motor or machinery prior to operating unit.
- ☐ Stopping torque is not produced when using the DC-Break function. Install separate equipment when stopping torque is needed.

(5) Fault prevention precautions

- ☐ Provide a safety backup such as an emergency brake which will prevent the machine and equipment from hazardous conditions if the inverter fails.

(6) Maintenance, inspection and parts replacement

- ☐ Do not conduct a mega (insulation resistance) test on the control circuit of the inverter.
- ☐ Refer to Chapter 7 for periodic inspection (parts replacement).

(7) Disposal

- ☐ Handle the inverter as an industrial waste when disposing of it.

(8) General instructions

Many of the diagrams and drawings in this instruction manual show the inverter without a circuit breaker, a cover or partially open. Never run the inverter like this. Always place the cover with circuit breakers and follow this instruction manual when operating the inverter.

Important User Information

- The purpose of this manual is to provide the user with the necessary information to install, program, start up and maintain the SV-iG5A series inverter.
- To assure successful installation and operation, the material presented must be thoroughly read and understood before proceeding.
- This manual contains…

Chapter	Title	Description
1	Basic information & precautions	Provides general information and precautions for safe use of the SV-iG5A series inverter.
2	Installation & Wiring	Provides instructions on how to install and wiring for power source & signal terminal of SV-iG5A inverter.
3	Basic configuration	Describes how to connect the optional peripheral devices to the inverter.
4	Programming keypad & Basic operation	Illustrates keypad features and display & Provides instructions for quick start of the inverter.
5	Function list	Parameter values are listed.
6	Control block diagram	Shows control flow to help users easily understand operation mode.
7	Troubleshooting & maintenance	Defines the various inverter faults and the appropriate action to take as well as general troubleshooting information.
8	Specifications & Option	Gives information on Input/Output rating, control type and more details of the SV-iG5A inverter. Explains options including Remote keypad, Conduit, EMC filter, DB resistor, DeviceNet Module.

Table of Contents

CHAPTER 1 - Basic information & precautions 1-1
1.1 Important precautions 1-1
1.2 Product Details 1-2
1.3 Product assembling & disassembling 1-3
CHAPTER 2 - Installation & Wiring 2-1
2.1 Installation precautions 2-1
2.2 Dimensions 2-3
2.3 Terminal wiring 2-5
2.4 Specifications for power terminal block wiring 2-6
2.5 Control terminal specification 2-9
2.6 PNP/NPN selection and connector for communication option 2-11
CHAPTER 3 - Basic configuration 3-1
3.1 Connection of peripheral devices to the inverter 3-1
3.2 Recommended MCCB 3-2
3.3 Recommendable Fuse, Reactors 3-2
CHAPTER 4 - Programming Keypad & Basic operation 4-1
4.1 Keypad features 4-1
4.2 Alpha-numeric view on the LED keypad 4-2
4.3 Moving to other groups 4-3
4.4 How to change the codes in a group 4-5
4.5 Parameter setting 4-7
4.6 Monitoring of operation status 4-10
4.7 Frequency Setting and Basic Operation 4-13
CHAPTER 5 - Function list 5-1
CHAPTER 6 - CONTROL BLOCK DIAGRAM 6-1
6.1 Frequency setting 6-2
6.2 Drive command setting 6-4
6.3 Accel/Decel setting and V/F control 6-5
CHAPTER 7 - Troubleshooting & Maintenance 7-1
7.1 Protective functions 7-1
7.2 Fault remedy 7-3
7.3 Precautions for maintenance and inspection 7-6
7.4 Check points 7-6
7.5 Part replacements 7-6
CHAPTER 8 - Specifications 8-1
8.1 Technical data 8-1
8.2 Temperature Derating Information 8-3

8.3 Remote option 8-4
8.4 Conduit Kit 8-6
8.5 Braking resistor 8-6
8.6 Field bus Communication Module 8-7
DECLARATION OF CONFORMITY I
Appendix A : European Standards I
Appendix B : Safe Disable Input Functions II

CHAPTER 1 - BASIC INFORMATION & PRECAUTIONS

1.1 Important precautions

Unpacking and inspection

- Inspect the inverter for any damage that may have occurred during shipping. To verify the inverter unit is the correct one for the application you need, check the inverter type, output ratings on the nameplate and the inverter is intact.

SV	004	iG5A	-	4	EN/ENC

	Motor rating		Series Name		Input power		Keypad	
LS Inverter	004	0.4 [kW]	iG5A		4	Three Phase 380~480[V]	EN	General I/O
	008	0.75 [kW]						
	015	1.5 [kW]					ENC	FieldBus Module
	022	2.2 [kW]						
	040	4.0 [kW]						

- Accessories

If you have found any discrepancy, damage, etc., contact your sales representative.

Preparations of instruments and parts required for operation

Instruments and parts to be prepared depend on how the inverter is operated. Prepare equipment and parts as necessary.

Installation

To operate the inverter with high performance for a long time, install the inverter in a proper place in the correct direction and with proper clearances

Wiring

Connect the power supply, motor and operation signals (control signals) to the terminal block. Note that incorrect connection may damage the inverter and peripheral devices

1.2 Product Details

- Appearance

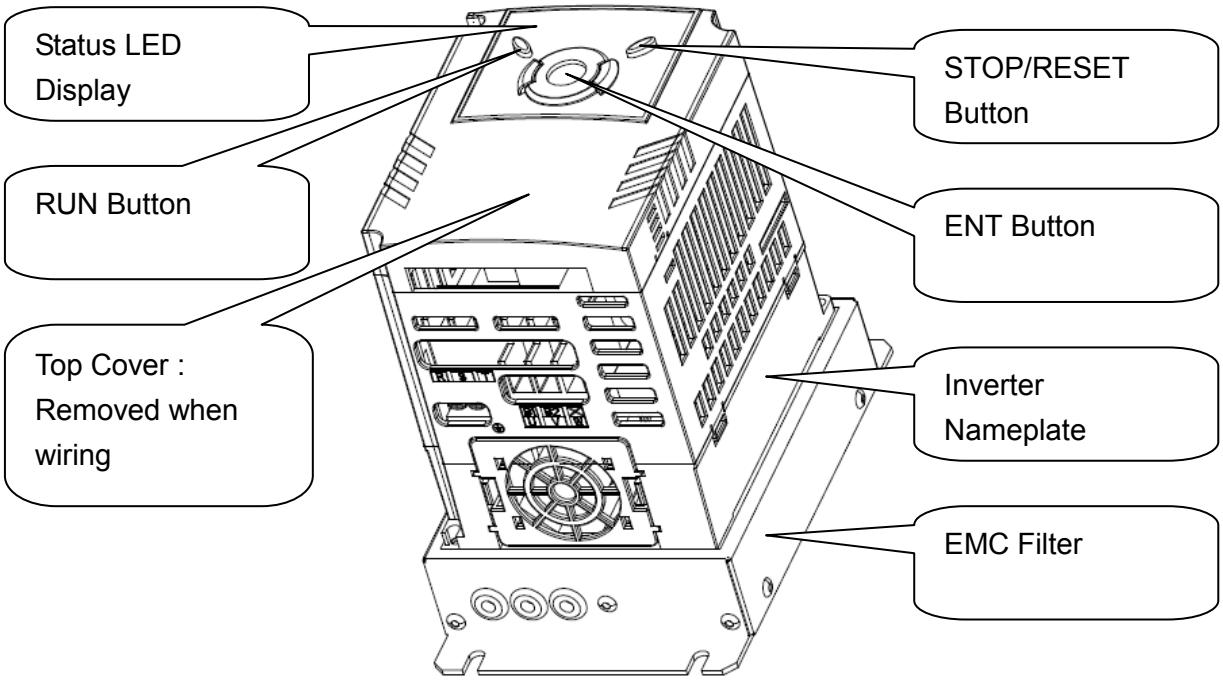

- Inside view after front cover is removed

Refer to “1.3 front cover removal” for details.

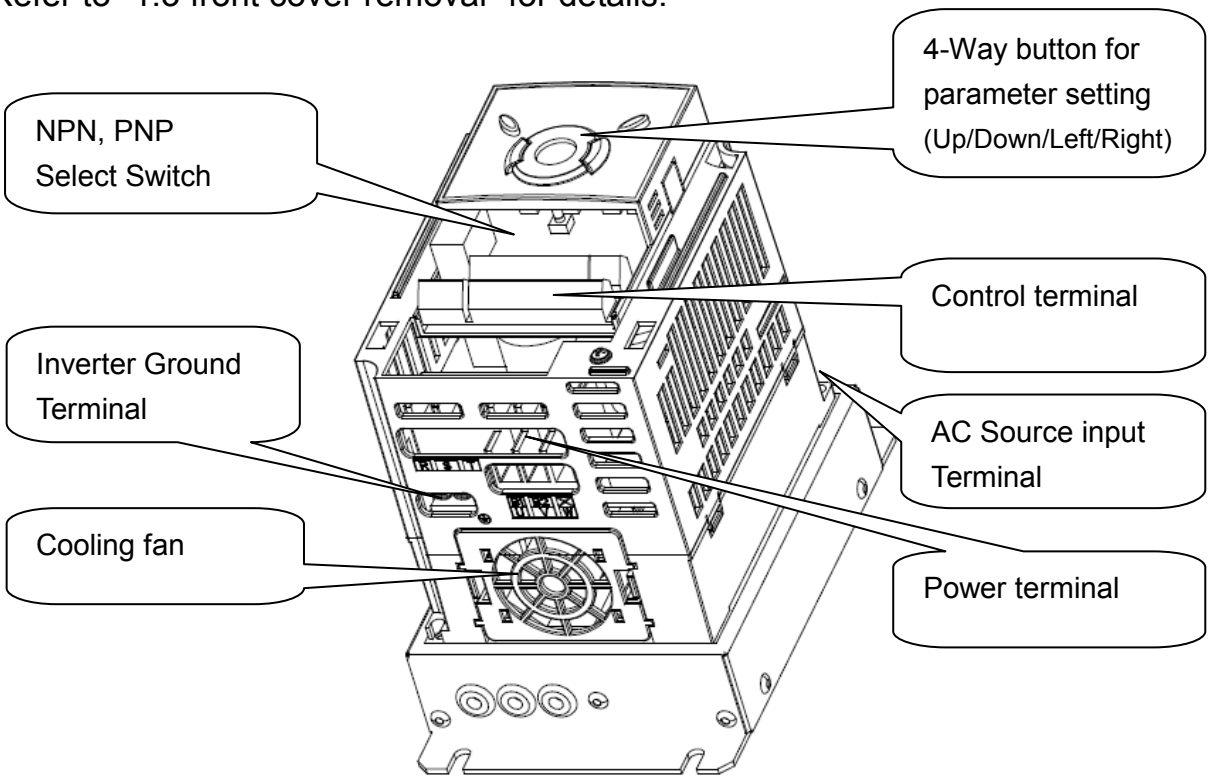

1.3 Product assembling & disassembling

- To remove the front cover: Release the screw and then press the both indented sides of the cover lightly and pull up.

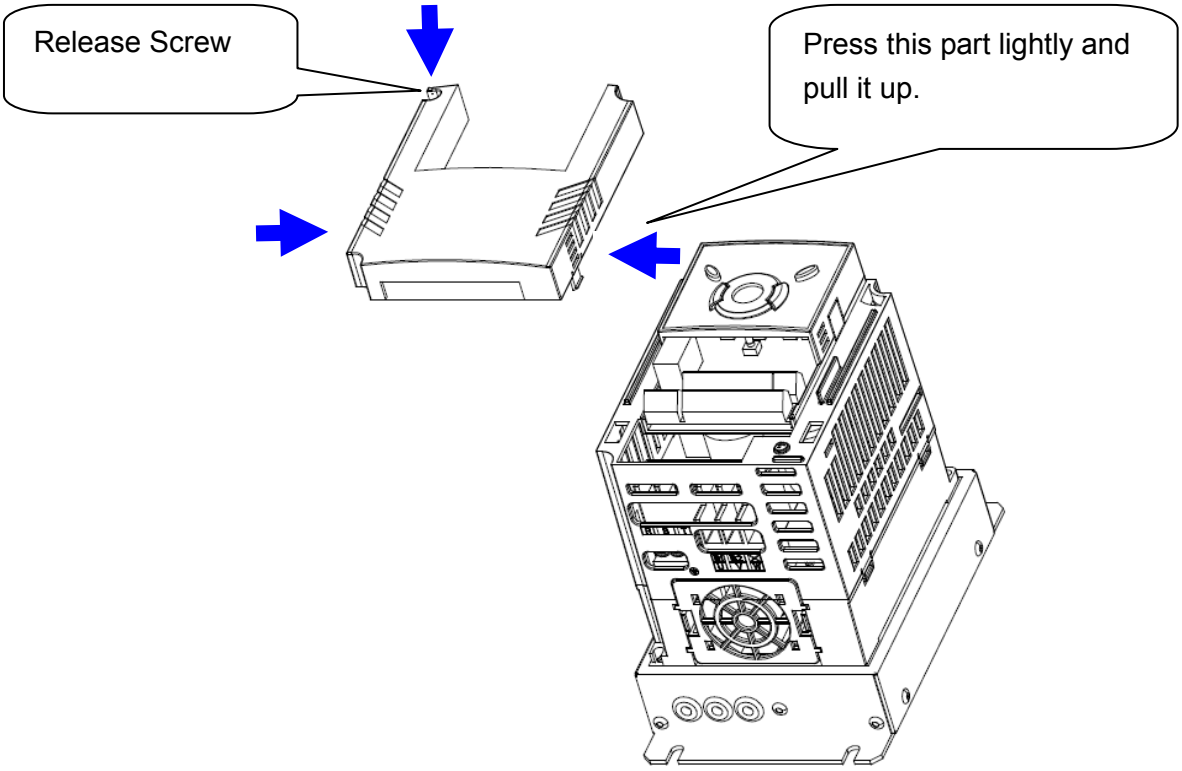

- To change the inverter fan: Press the both sides of bottom cover lightly and pull out to your side.

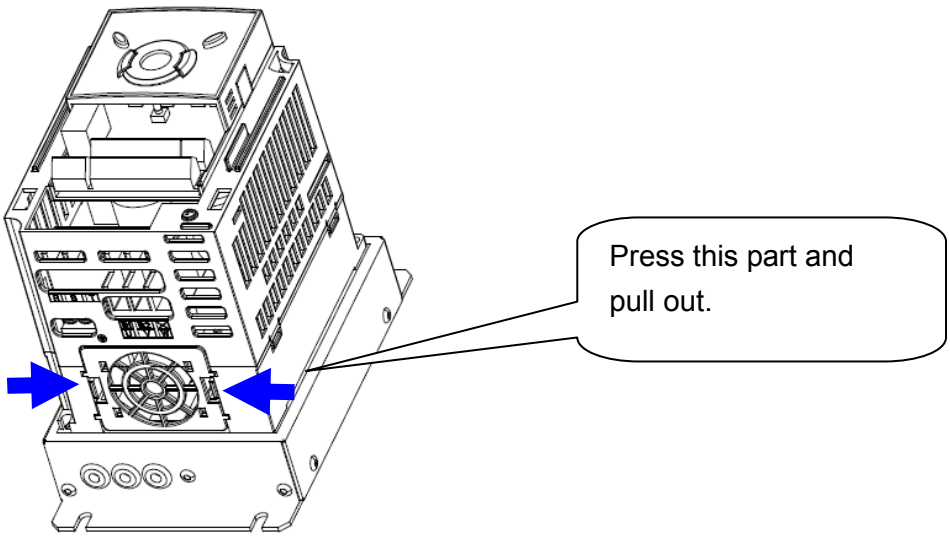

MEMO

CHAPTER 2 - INSTALLATION & WIRING

2.1 Installation precautions

⚠ CAUTION

- Handle the inverter with care to prevent damage to the plastic components. Do not hold the inverter by the front cover. It may fall off.
- Install the inverter in a place where it is immune to vibration (5.9 m/s^2 or less).
- Install in a location where temperature is within the permissible range (-10~50°C).

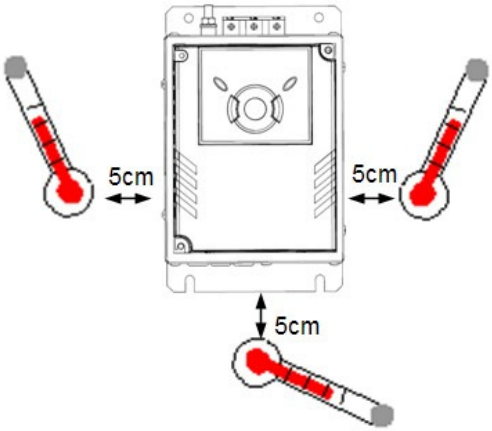

<Ambient Temperature Checking Location>

- The inverter will be very hot during operation. Install it on a non-combustible surface.
- Mount the inverter on a flat, vertical and level surface. Inverter orientation must be vertical (top up) for proper heat dissipation. Also leave sufficient clearances around the inverter.

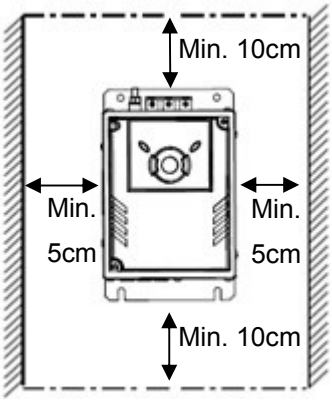

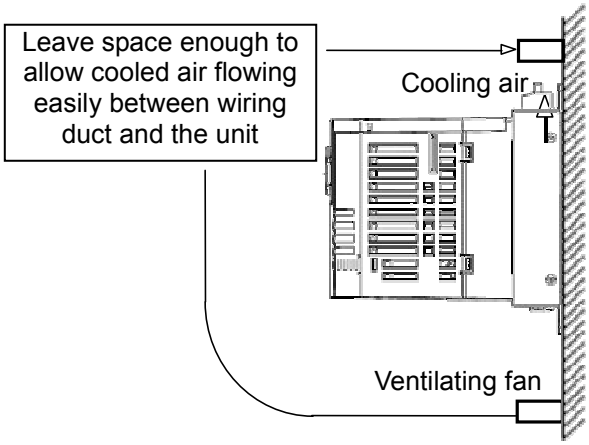

- Protect from moisture and direct sunlight.
- Do not install the inverter in any environment where it is exposed to water drops, oil mist, dust, etc. Install the inverter in a clean place or inside a “totally enclosed” panel any suspended matter is not entered.

- When two or more inverters are installed or a cooling fan is mounted in a panel, the inverters and fan must be installed in proper positions with extreme care to keep the ambient temperature below the permissible range.
- Installed the inverter using screws or bolts to insure the inverter is firmly fastened.

< When two or more units are installed >

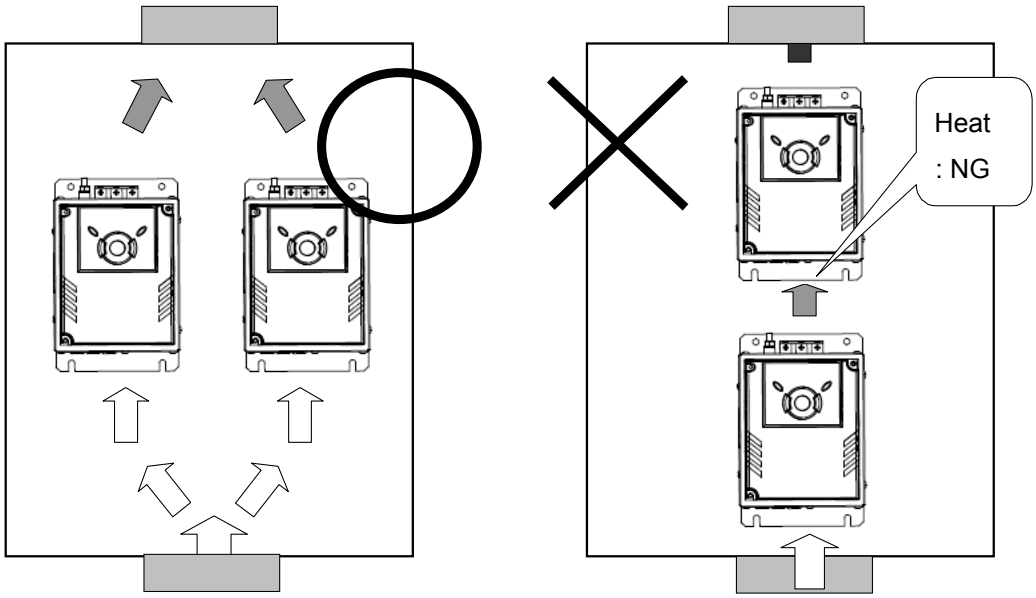

< Where the ventilation fan is installed >

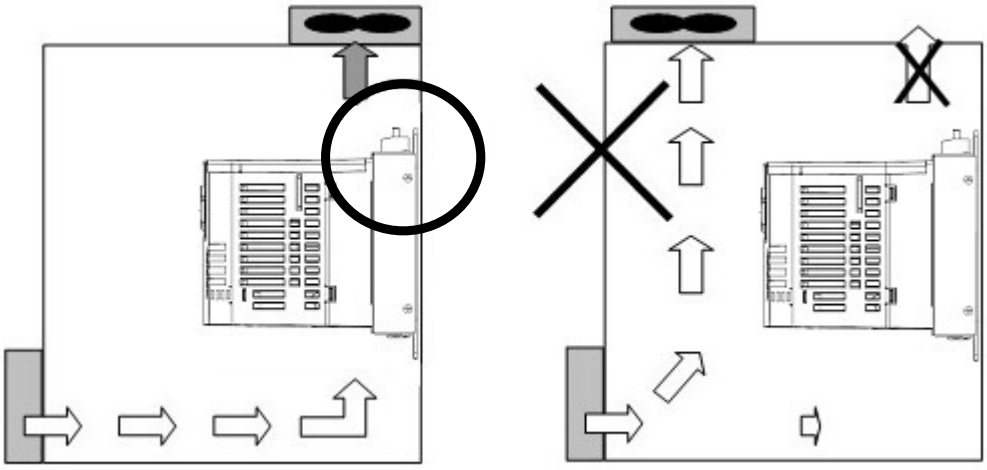

⚠ CAUTION
Take caution on proper heat ventilation when installing inverters and fans in a panel.

2.2 Dimensions

SV004iG5A-4EN / SV008iG5A-4EN

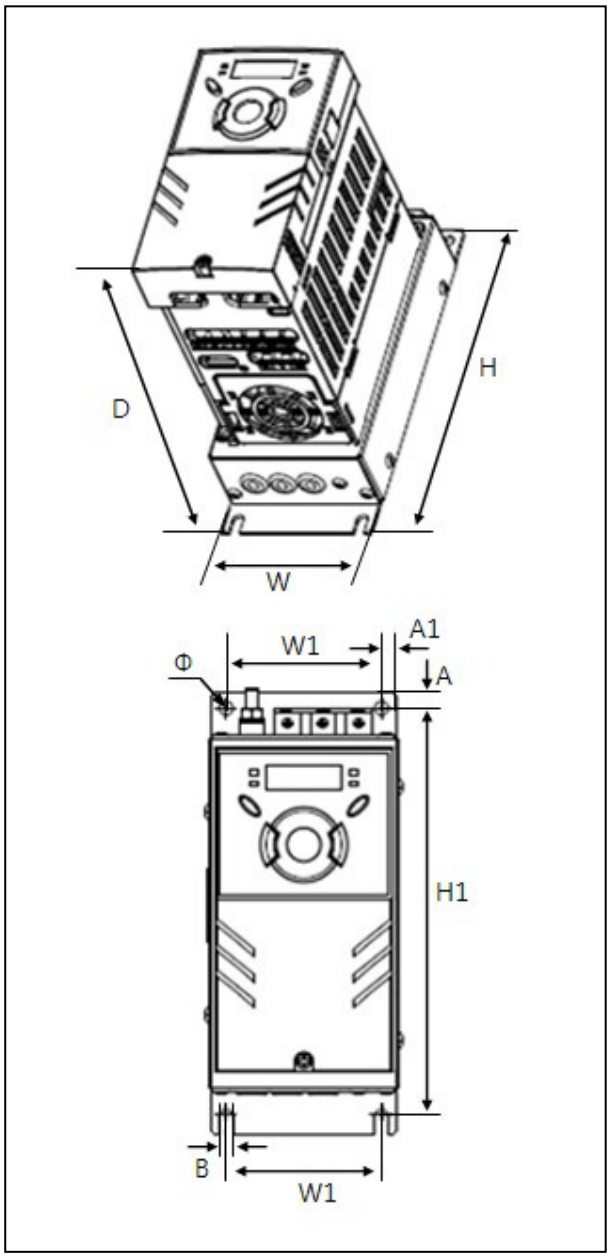

SV015iG5A-4EN

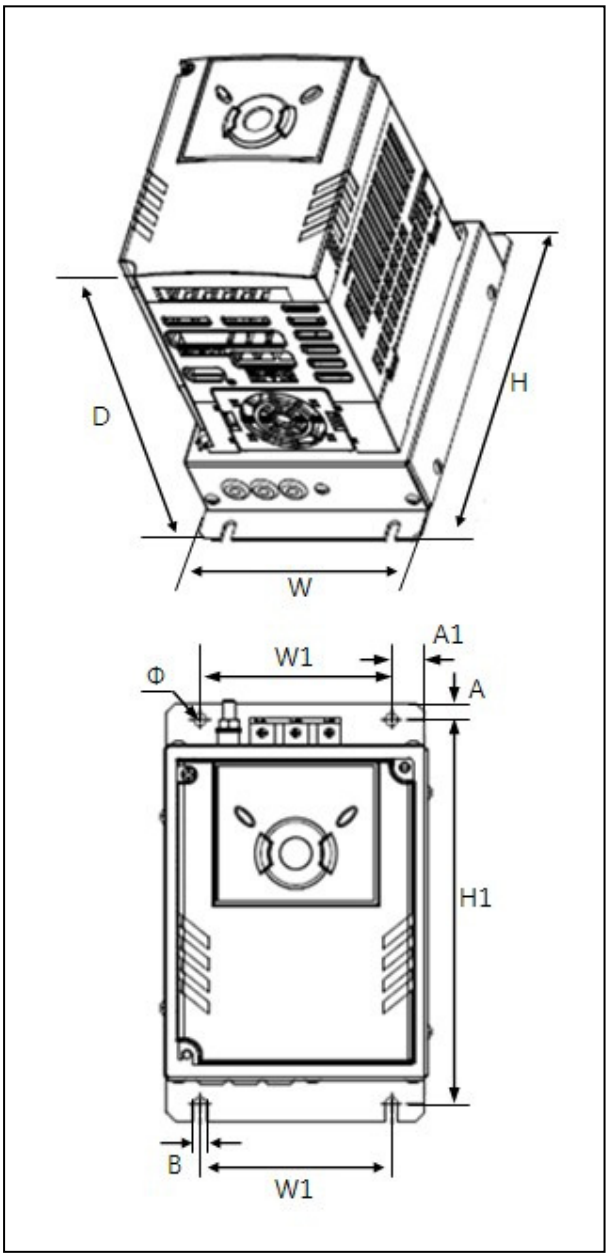

SV022iG5A-4EN / SV040iG5A-4EN

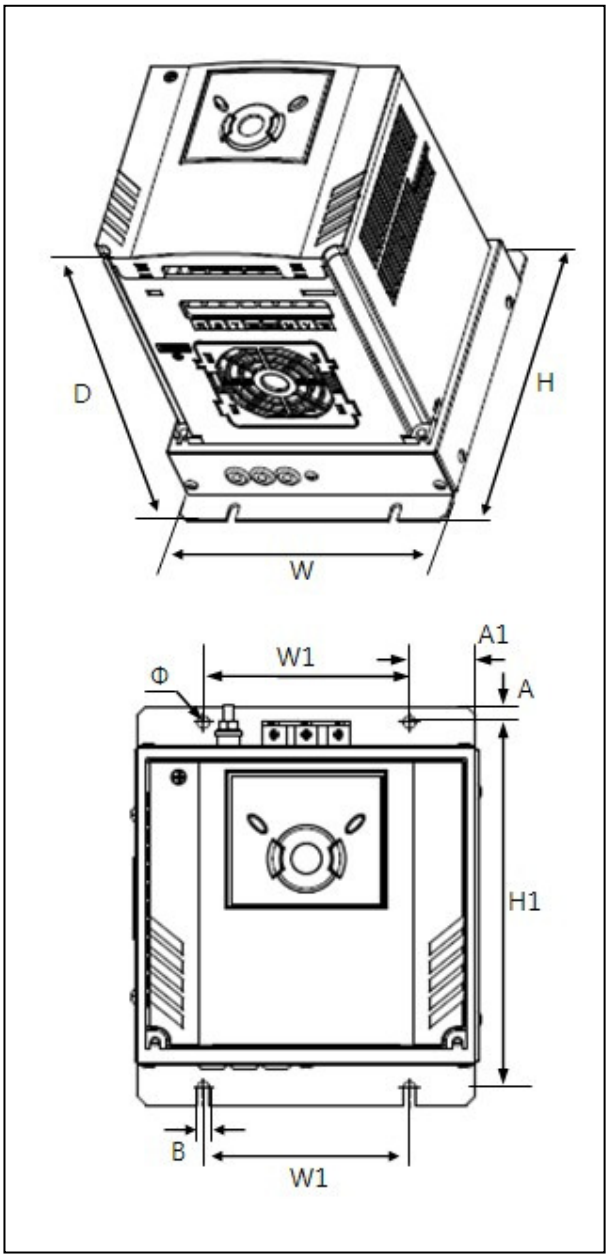

Inverter	W [mm]	W1 [mm]	H [mm]	H1 [mm]	D [mm]	Φ	A [mm]	A1 [mm]	B [mm]	[Kg]
SV004IG5A-4	75	61	175	160.5	164	5.5	6.5	6	5.5	1.13
SV008IG5A-4	75	61	175	160.5	164	5.5	6.5	6	5.5	1.14
SV015IG5A-4	110	80	175	160.5	164	5.5	7	14	5.5	1.54
SV022IG5A-4	150	90	175	160.5	190	5.5	7	29	5.5	2.32
SV040IG5A-4	150	90	175	160.5	190	5.5	7	29	5.5	2.37

2.3 Terminal wiring

* Control terminal wiring

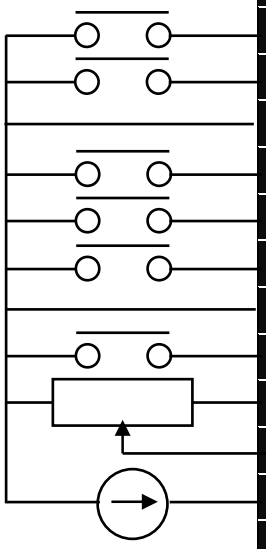

T/M	Description	
MO	Multi-function open collector output	
MG	MO Common	
24	24V output	
P1	MF input terminal (factory setting)	FX: Forward run
P2		RX: Reverse run
CM	Input signal common	
P3	MF input terminal (factory setting)	BX: Emergency stop
P4		RST: Trip reset
P5		JOG: Jog operation
CM	Input signal common	
P6	MF input terminal	Multi-step freq.-Low
VR	12V power supply for potentiometer	
V1	Freq. Setting Voltage signal input: 0~10V	
I	Freq. Setting Current signal input: 0~20mA	
AM	Multi-function analog output signal: 0~10V	
SA	Safety Input A	Open : Coast to stop(Note1)
SB	Safety Input B	Closed : Normal operation
SC	Power supply for Safety Function (24Vdc)	
3A	Multi-function relay output terminal	A contact output
3B		B contact output
3C		A/B contact common
S+	RS485 communication terminal	
S-		

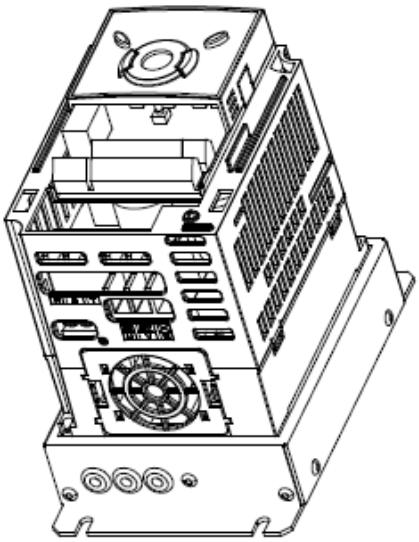

Note1) Disconnect wire jumper between SA, SB and SC when using safety input

※ For connection to Remote Option or parameter copying

* Power terminal wiring

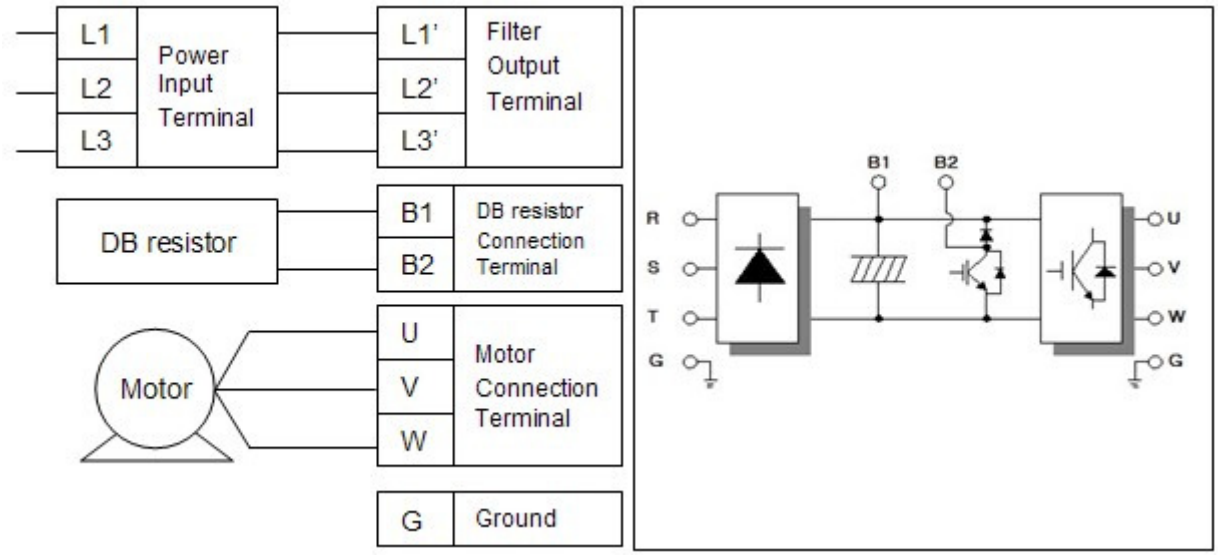

2.4 Specifications for power terminal block wiring

Standard 0.4 ~ 1.5kW terminal block (L1'=R, L2'=S, L3'=T)

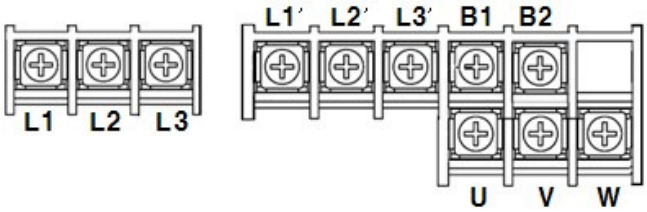

Standard 2.2 ~ 4.0kW terminal block (L1'=R, L2'=S, L3'=T)

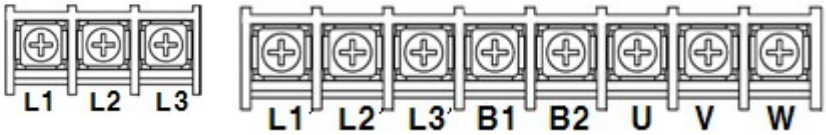

	L1,L2,L3 Size		U,V,W Size		Ground Size		Terminal Screw Size	Screw Torque (Kgf.cm)/lb-in
	mm^2	AWG	mm^2	AWG	mm^2	AWG		
SV004iG5A-4EN	2	14	2	14	2	14	M3.5	10/8.7
SV008iG5A-4EN	2	14	2	14	2	14	M3.5	10/8.7
SV015iG5A-4EN	2	14	2	14	2	14	M4	15/13
SV022iG5A-4EN	2	14	2	14	2	14	M4	15/13
SV040iG5A-4EN	2	14	2	14	2	14	M4	15/13

* Strip the sheaths of the wire insulation 7mm when a ring terminal is not used for power connection.

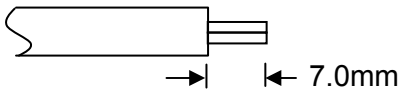

⚠ CAUTION

- Apply the rated torque to terminal screws. Loosen screws can cause of short circuit and malfunction. Tightening the screw too much can damage the terminals and cause short circuit and malfunction.
- Use copper wires only with 600V, 75℃ ratings for wiring.
- Make sure the input power is off before wiring.
- When power supply is switched off following operation, wait at least 10 minutes after LED keypad display is off before you start working on it.
- Applying input power supply to the output terminals U, V and W causes internal inverter damage.
- Use ring terminals with insulated caps when wiring the input power and motor wiring.
- Do not leave wire fragments inside the inverter. Wire fragments can cause faults, breakdowns and malfunctions.
- When more than one motor is connected to one inverter, total wire length should be less than 100m (328ft). Do not use a 3-wire cable for long distances. Due to increased leakage capacitance between wires, over-current protective feature may operate or equipment connected to the output side may malfunction. In case of long wire length, it should be required to lower carrier frequency or use Micro Surge Filter.

Length between Inverter and Motor	Up to 50m	Up to 100m	More than 100m
Allowable Carrier Frequency	Less than 15kHz	Less than 5kHz	Less than 2.5kHz

- Never short B1 and B2 terminals. Shorting terminals may cause internal inverter damage.
- Do not install a power factor capacitor, surge suppressor or RFI filters in the output side of the inverter. Doing so may damage these components.

[WARNING]
Power supply must be connected to the R, S, and T Terminals.
Connecting it to the U, V, W terminals causes internal damages to the inverter. Arranging the phase sequence is not necessary.
Motor should be connected to the U, V, and W Terminals.
If the forward command (FX) is on, the motor should rotate counter clockwise when viewed from the load side of the motor. If the motor rotates in the reverse, switch the U and V terminals.

⚠ WARNING

- Be sure to ground the drive ground terminal. (Ground to 10Ω or less)
- Improper equipment grounding could result in death or serious injury by contacting ungrounded electrical equipment.

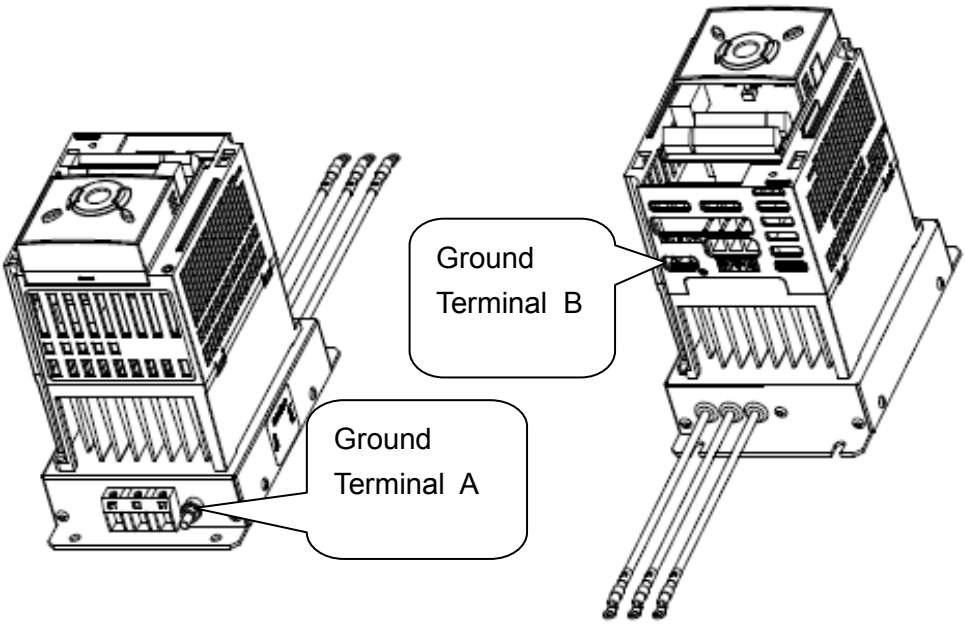

Note

Grounding procedure

1) Use Terminal A to earth.
2) For using Terminal B :
   Remove the front cover and release the input wire(R,S,T).
   Connect the grounding wire to the ground terminal through the opening for ground terminal as shown above. Enter the screw driver from vertical to the terminal and secure the screw tightly.

Note Grounding work guidance

Inverter capacity	400V Class			
	Ground Terminal	Wire size	Terminal screw	Ground method
0.4~4.0 kW	Terminal A	2.0~14.0 mm^2	M5	Special Type 3
	Terminal B	2.0 mm^2	M3	

2.5 Control terminal specification

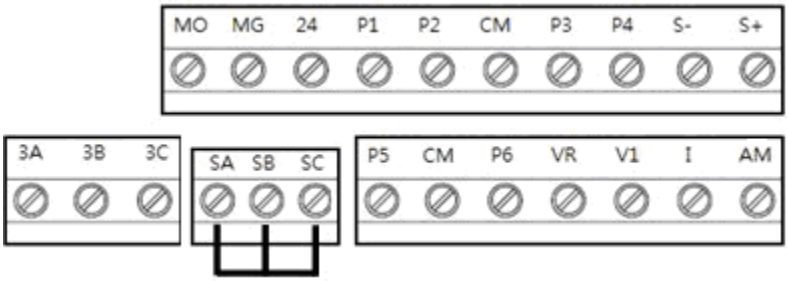

T/M	Terminal Description	Wire size[mm^2]		Screw size	Torque [Nm]	Specification
		single wire	Stranded			
P1~ P6	Multi-function input T/M 1-6	1.0	1.5	M2.6	0.4	
CM	Common Terminal	1.0	1.5	M2.6	0.4	
VR	Power supply for external potentiometer	1.0	1.5	M2.6	0.4	Output voltage: 12V Max output current: 10mA Potentiometer:1 ~ 5kohm
V1	Input terminal for Voltage operation	1.0	1.5	M2.6	0.4	Max input voltage: -10V ~ +10V input
I	Input terminal for Current operation	1.0	1.5	M2.6	0.4	0 ~ 20mA input Internal resistor: 250 ohm
AM	Multi-function analog output terminal	1.0	1.5	M2.6	0.4	Max output voltage: 11[V] Max output current: 10mA
MO	Multi-function terminal for open collector	1.0	1.5	M2.6	0.4	Below DC 26V,100mA
MG	Ground terminal for external power supply	1.0	1.5	M2.6	0.4	
24	24V External Power Supply	1.0	1.5	M2.6	0.4	Max output current: 100mA
SA	Safety input command 1	1.0	1.5	M2.6	0.4	Open : Coast to stop safety input Closed : Normal operation
SB	Safety input command 2	1.0	1.5	M2.6	0.4	
SC	Power supply for safety input command	1.0	1.5	M2.6	0.4	+24Vdc, Max. 10mA
3A	Multi-function relay output A contact	1.0	1.5	M2.6	0.4	Below AC 250V, 1A
3B	Multi-function relay output B contact	1.0	1.5	M2.6	0.4	Below DC 30V, 1A
3C	Common for Multi-function relays	1.0	1.5	M2.6	0.4	

Note 1) Tie the control wires more than 15cm away from the control terminals.
Otherwise, it interferes front cover reinstallation
Note 2) Use Copper wires rated 600V, 75 ℃ and higher.
Note 3) Use the recommended tightening torque when securing terminal screws.

Note

1) When you use external power supply (24V) for multi-function input terminal (P1~P6), terminals will be active above 12V level. Take caution not to drop the voltage below 12V.
2) When you use safety function, disconnect wire jumper between SA, SB and SC
3) Wire the control terminal only after terminals have been properly grounded and main circuit wiring is complete.
When control terminal wiring, use shielded twisted-pair cables as indicated to prevent operating faults. Improper wiring practices could result in drive or equipment malfunction due to electrical interference.

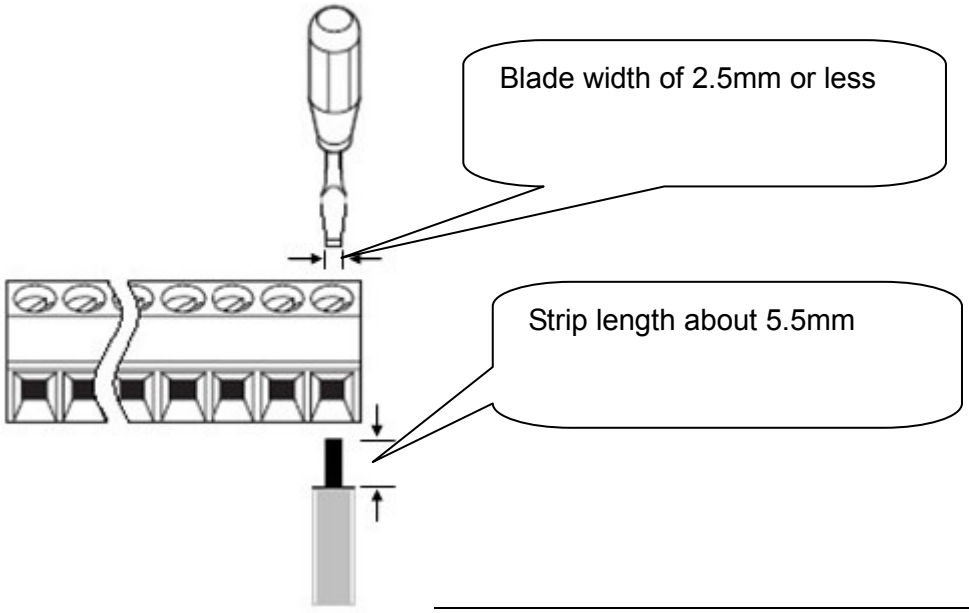

2.6 PNP/NPN selection and connector for communication option

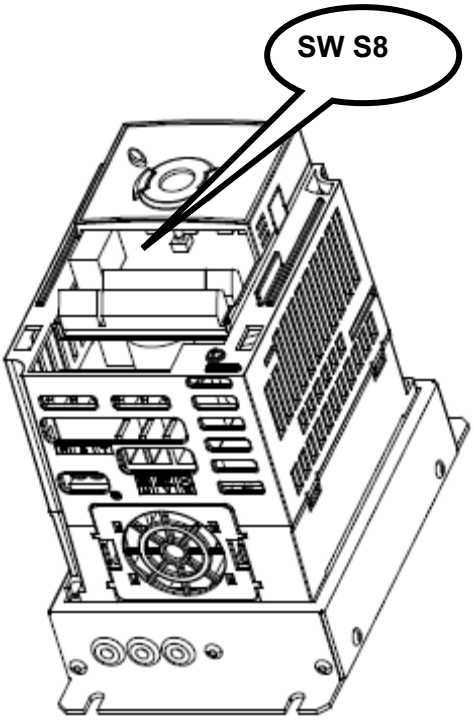

1. When using DC 24V inside inverter [NPN]

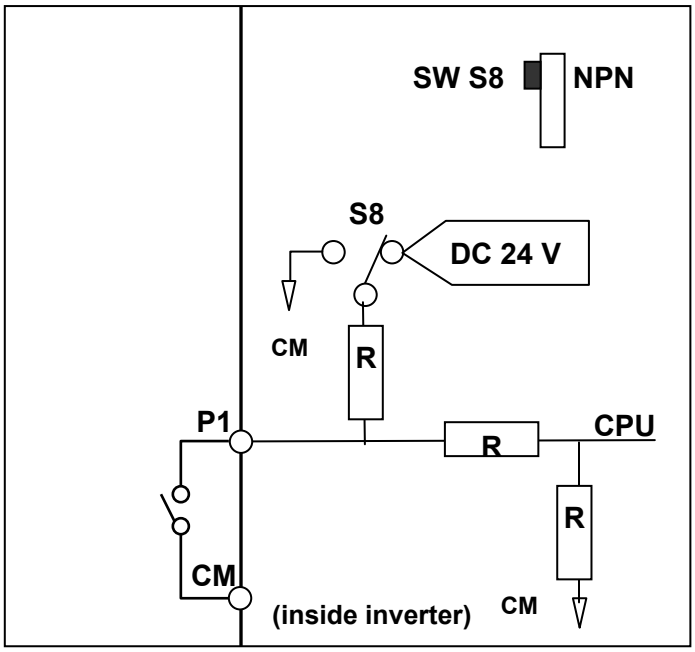

2. When using external DC 24V [PNP]

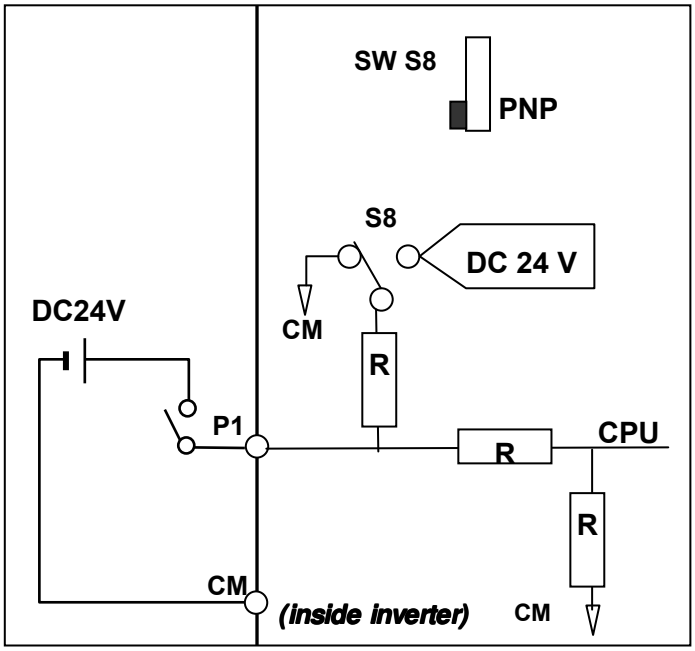

M E M O

CHAPTER 3 - BASIC CONFIGURATION

3.1 Connection of peripheral devices to the inverter

The following devices are required to operate the inverter. Proper peripheral devices must be selected and correct connections made to ensure proper operation. An incorrectly applied or installed inverter can result in system malfunction or reduction in product life as well as component damage. You must read and understand this manual thoroughly before proceeding.

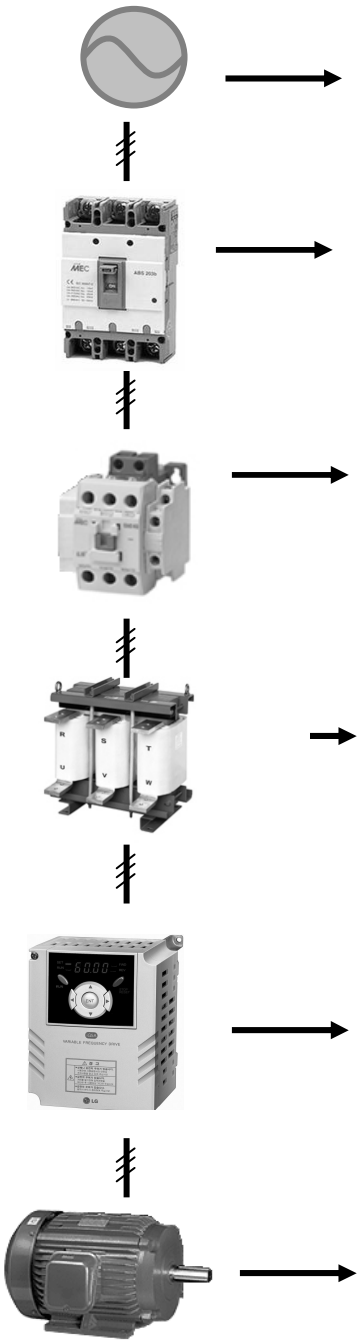

AC Source Supply	Use the power supply within the permissible range of inverter input power rating (Refer to Page 8-1).
MCCB or Earth leakage circuit breaker (ELB)	Select circuit breakers with care. A large inrush current may flow in the inverter at power on.
Magnetic Contactor	Install it if necessary. When installed, do not use it for the purpose of starting or stopping. Otherwise, it could lead to reduction in product life.
AC Reactors	The AC reactors must be used when the power factor is to be improved or the inverter is installed near a large power supply system (more than 10 times of inverter capacity and wiring distance within 10m).
Installation and wiring	To operate the inverter with high performance for a long time, install the inverter in a proper place in the correct direction and with proper clearances. Incorrect terminal wiring could result in the equipment damage.
To motor	Do not connect a power factor capacitor, surge suppressor or radio noise filter to the output side of the inverter.

3.2 Recommended MCCB

Inverter Capacity	MCCB (LS)	MC
004iG5A-4	TD125U,EBs33	GMC-12
008iG5A-4	TD125U,EBs33	GMC-12
015iG5A-4	TD125U,EBs33	GMC-12
022iG5A-4	TD125U,EBs33	GMC-22
040iG5A-4	TD125U,EBs33	GMC-22

Note

The capacity of the MCCB should be 1.5 to 2 times the rated output current of the drive. Use an MCCB keep the drive from faulting out instead of using overheat protection (150% for one minute at the rated output current.

3.3 Recommendable Fuse, Reactors

Inverter Capacity	AC Input fuse [External Fuse]		AC Reactor	DC Reactor
	Current	Voltage		
004iG5A-4	5 A	600 V	18.0 mH, 1.3A	-
008iG5A-4	10 A	600 V	8.63 mH, 2.8A	-
015iG5A-4	10 A	600 V	4.81 mH, 4.8A	-
022iG5A-4	10 A	600 V	3.23 mH, 7.5A	-
040iG5A-4	20 A	600 V	2.34 mH, 10A	-

- **Short Circuit Rating**

  "Suitable For Use ON A Circuit Capable Of Delivering Not More Than 65KA Symmetrical Amperes. 480V drives Volts Maximum,"

- **Short Circuit FUSE/BREAKER Marking**

  Use Class H or RK5 UL Listed Input Fuse and UL Listed Breaker Only. See the table above For the Voltage and Current rating of the fuse and the breaker

MEMO

CHAPTER 4 - PROGRAMMING KEYPAD & BASIC OPERATION

4.1 Keypad features

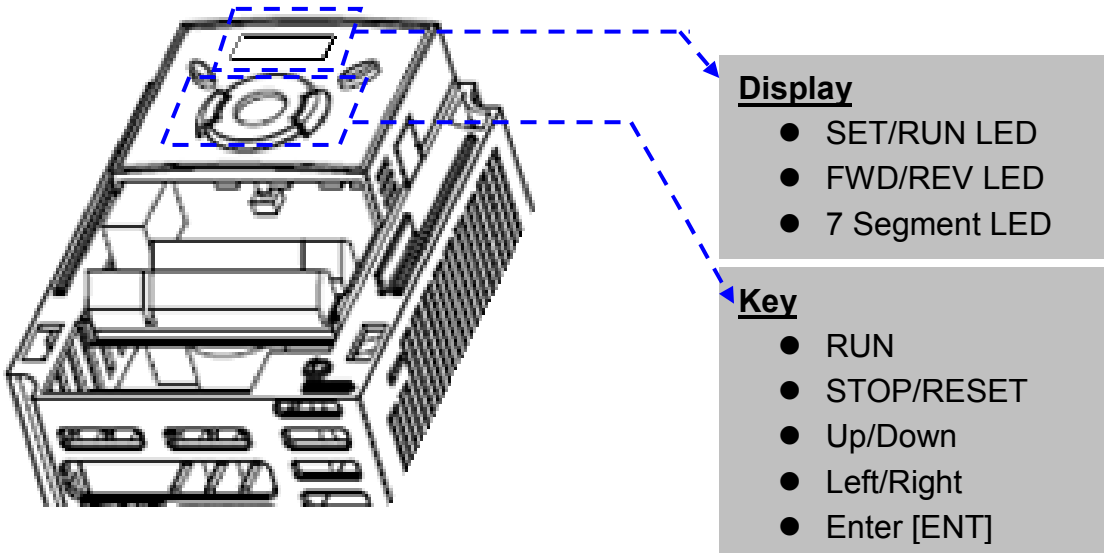

Display		
FWD	Lit during forward run	Blinks when a fault occurs
REV	Lit during reverse run	
RUN	Lit during Operation	
SET	Lit during parameter setting	
7 segment	Displays operation status and parameter information	

Keys		
RUN		Run command
STOP/RESET		STOP: Stop command during operation, RESET: Reset command when fault occurs.
▲	UP	Used to scroll through codes or increase parameter value
▼	Down	Used to scroll through codes or decrease parameter value
◀	Left	Used to jump to other parameter groups or move a cursor to the left to change the parameter value
▶	Right	Used to jump to other parameter groups or move cursor to the right to change the parameter value
●	ENT	Used to set the parameter value or save the changed parameter value

4.2 Alpha-numeric view on the LED keypad

0	0	A	A	K	K	U	U
1	1	b	B	L	L	v	V
2	2	C	C	m	M	w	W
3	3	d	D	n	N	x	X
4	4	E	E	O	O	y	Y
5	5	F	F	P	P	z	Z
6	6	G	G	q	Q		
7	7	H	H	r	R		
8	8	I	I	S	S		
9	9	J	J	t	T		

4.3 Moving to other groups

- There are 4 different parameter groups in SV- iG5A series as shown below.

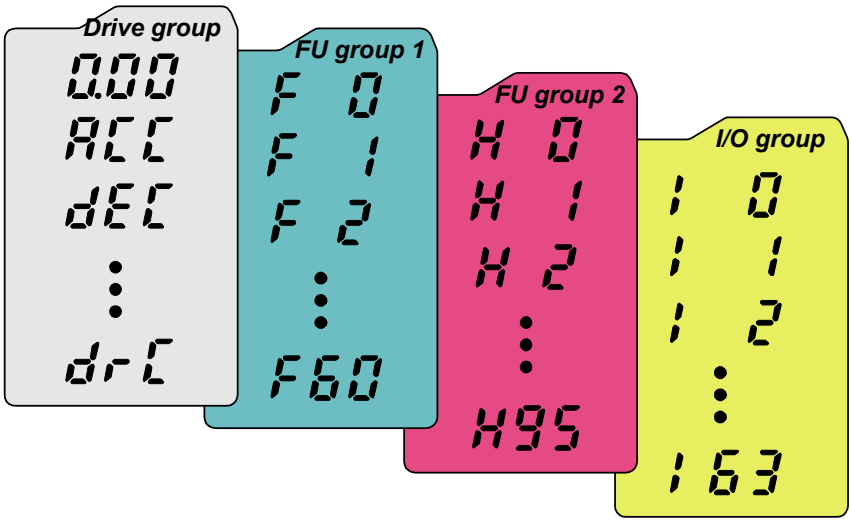

Drive group	Basic parameters necessary for the inverter to run. Parameters such as Target frequency, Accel/Decel time settable.
Function group 1	Basic function parameters to adjust output frequency and voltage.
Function group 2	Advanced function parameters to set parameters for such as PID Operation and second motor operation.
I/O (Input/Output) group	Parameters necessary to make up a sequence using Multi-function input/output terminal.

- **<u>Moving to other parameter groups</u>** is only available in the first code of each group as the figure shown below.

Moving to other groups using the Right (▶) key	Moving to other groups using the Left (◀) key
* 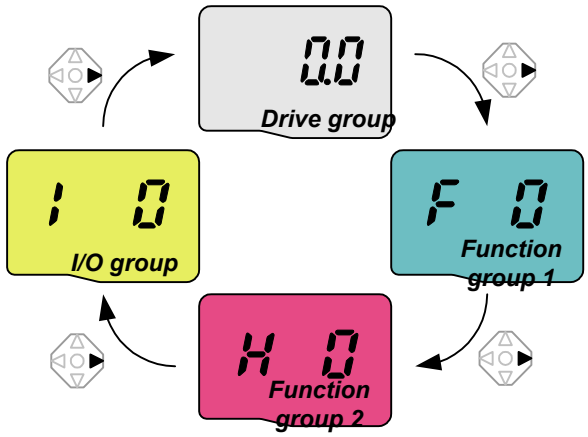	* 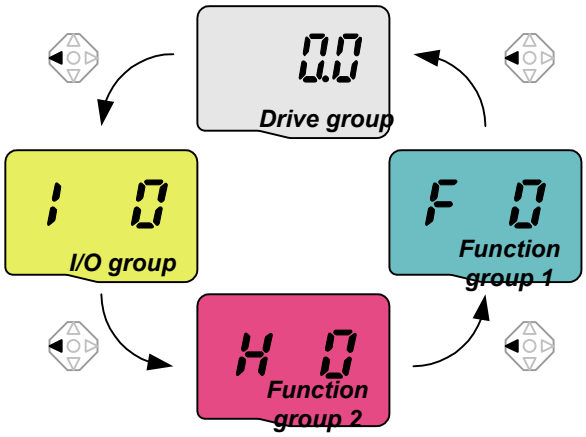

* Target frequency can be set at **0.0** (the 1st code of drive group). Even though the preset value is 0.0, it is user-settable. The changed frequency will be displayed after it is changed.

- How to move to other groups at the 1st code of each group

1	0.00	-. **The 1st code in Drive group "0.00"** will be displayed when AC input power is applied. -. Press the right arrow (▶) key once to go to Function group 1.
2	F 0	-. **The 1st code in Function group 1 "F 0"** will be displayed. -. Press the right arrow (▶) key once to go to Function group 2.
3	H 0	-. **The 1st code in Function group 2 "H 0"** will be displayed. -. Press the right arrow (▶) key once to go to I/O group.
4	I 0	**-. The 1st code in I/O group "I 0" will be displayed.** -. Press the right arrow (▶) key once again to return to Drive group.
5	0.00	-. Return to **the 1st code in Drive group "0.00"**.

♣ If the left arrow key (◀) is used, the above will be executed in the reverse order.

- How to move to other groups from any codes other than the 1st code

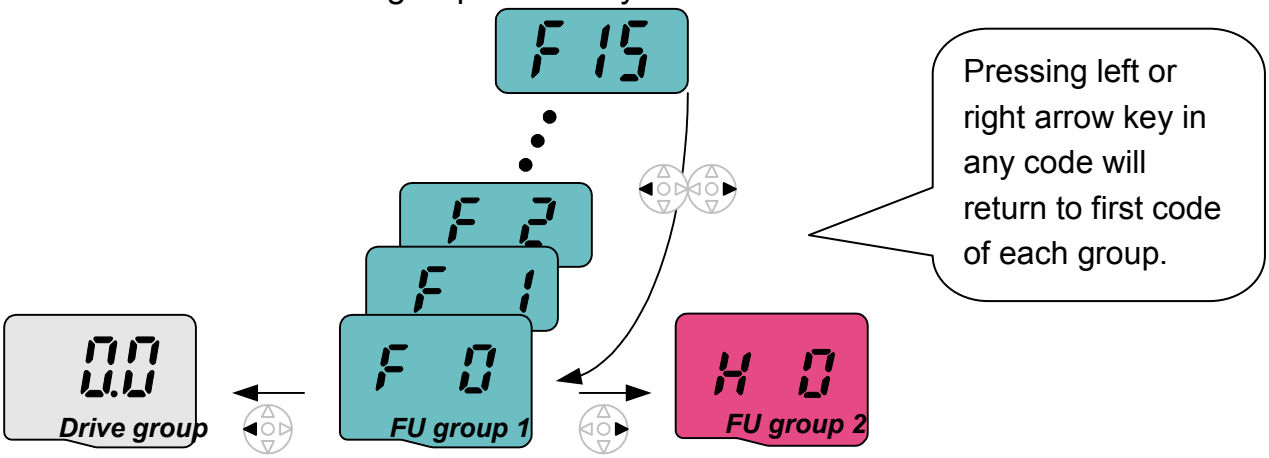

To move from the F 15 to function group 2

1	F 15	-. In F 15, press the Left (◀) or Right arrow (▶) key. Pressing the key goes to the first code of the group.
2	F 0	-. The 1st code in function group 1 "F 0" is displayed. -. Press the right arrow (▶) key.
3	H 0	-. The 1st code in function group 2 "H 0" will be displayed.

4.4 How to change the codes in a group

● Code change in Drive group

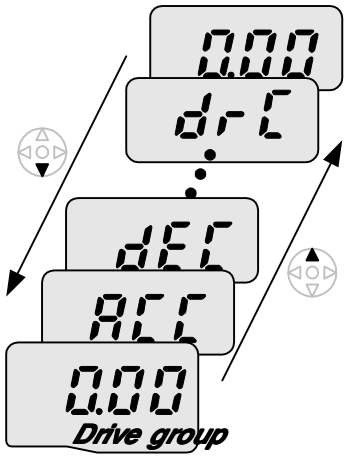

1	0.00	-. In the 1st code in Drive group "0.00", press the Up (▲) key once.
2	ACC	-. The 2nd code in Drive group "ACC" is displayed. -. Press the Up (▲) key once.
3	dEC	-. The 3rd code "dEC" in Drive group is displayed. -. Keep pressing the Up (▲) key until the last code appears.
4	drC	-. The last code in Drive group "drC" is displayed. -. Press the Up (▲) key again.
5	0.00	-. Return to the first code of Drive group.
♣ Use Down (▼) key for the opposite order.		

● Code jump

When moving from the "F 0" to the "F 15" directly

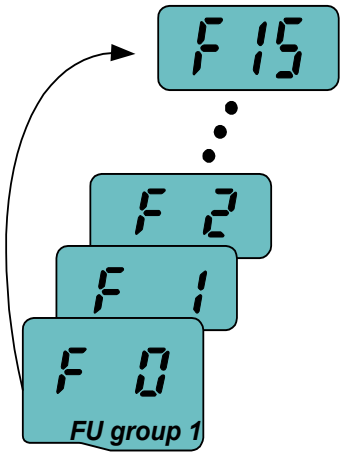

1	F 0	-. Press the Ent (●) key in "F 0".
2	1	-. 1 (the code number of F1) is displayed. Use the Up (▲) key to set to 5.
3	05	-. "**0**5" is displayed by pressing the Left (◀) key once to move the cursor to the left. The numeral having a cursor is displayed brighter. In this case, **0** is active. -. Use the Up (▲) key to set to 1.
4	15	-. **1**5 is set. -. Press the Ent (●) key once.
5	F 15	-. Moving to F 15 has been complete.
♣ Function group 2 and I/O group are settable with the same setting.		

● Navigating codes in a group

When moving from F 1 to F 15 in Function group 1

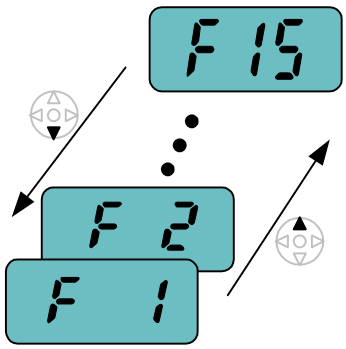

1	F 1	-. In F 1, continue pressing the Up (▲) key until F15 is displayed.
2	F 15	-. Moving to F15 has been complete.

♣ The same applies to Function group 2 and I/O group.

♣Note: Some codes will be skipped in the middle of increment (▲)/decrement (▼) for code change. That is because it is programmed that some codes are intentionally left blank for future use or the codes user does not use are invisible.
Refer to the Ch.5 for more specific contents

For example, when F24 [High/low frequency limit select] is set to “O (No) ”, F25 [High frequency limit] and F26 [Low frequency limit] are not displayed during code change. But When F24 is set to “1(Yes)”, F25 and F26 will appear on the display.

4.5 Parameter setting

- Changing parameter values in Drive Group

When changing ACC time from 5.0 sec to 16.0 sec

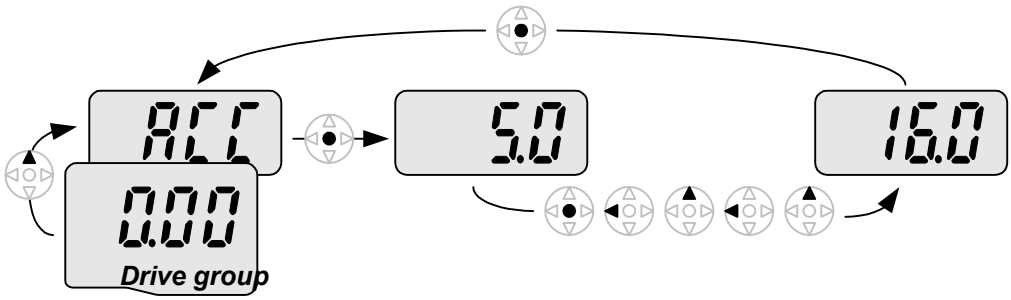

1	0.00	-. In the first code “0.00”, press the Up (▲) key once to go to the second code.
2	ACC	-. ACC [Accel time] is displayed. -. Press the Ent key (●) once.
3	5.0	-. Preset value is 5.**0**, and the cursor is in the digit **0**. -. Press the Left (◀) key once to move the cursor to the left.
4	5.0	-. The digit **5** in **5**.0 is active. Then press the Up (▲) key once.
5	6.0	-. The value is increased to **6**.0 -. Press the Left (◀) key to move the cursor to the left.
6	0.60	-. **0**.60 is displayed. The first **0** in **0**.60 is active. -. Press the Up (▲) key once.
7	16.0	-. **1**6.0 is set. -. Press the Ent (●) key once. -. **1**6.0 is blinking. -. Press the Ent (●) key once again to return to the parameter name.
8	ACC	-. **ACC** is displayed. **Accel time** is changed from 5.0 to 16.0 sec.

♣ In step 7, pressing the Left (◀) or Right (▶) key while 16.0 is blinking will disable the setting.

Note 1) Pressing the Left (◀)/ Right (▶) /Up (▲) /Down (▼) key while cursor is blinking will cancel the parameter value change. Pressing the Enter key (●) in this status will enter the value into memory.

● Frequency setting

When changing run frequency to 30.05 Hz in Drive group

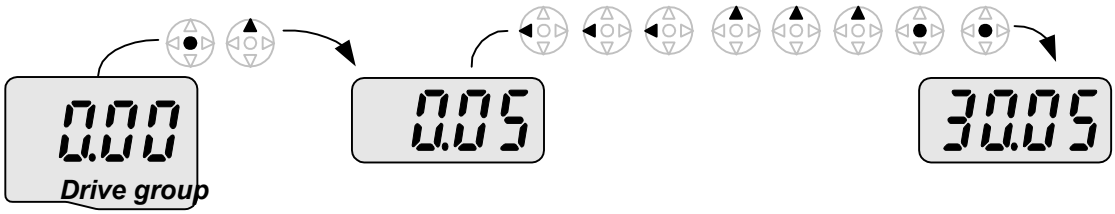

1	0.00	-. In “0.00”, press the Ent (●) key once.
2	0.00	-. The second decimal **0** becomes active. -. Press the UP (▲) key until 5 is displayed.
3	0.05	-. Press the Left (◀) key once.
4	0.05	-. The first decimal **0** becomes active. -. Press the Left (◀) key once.
5	0.05	-. Press the Left (◀) key once.
6	00.05	-. Set 3 using UP (▲) key.
7	30.05	-. Press the Ent (●) key. -. 30.05 is blinking. -. Press the Ent (●) key.
8	30.05	-. 30.05 is entered into memory.

♣ SV-iG5A display can be extended to 5 digits using left (◀)/right (▶) keys.

♣ Parameter setting is disabled when pressing other than Enter Key in step 7.

● Changing parameter value in Input/Output group

When changing the parameter value of F28 from 2 to 5

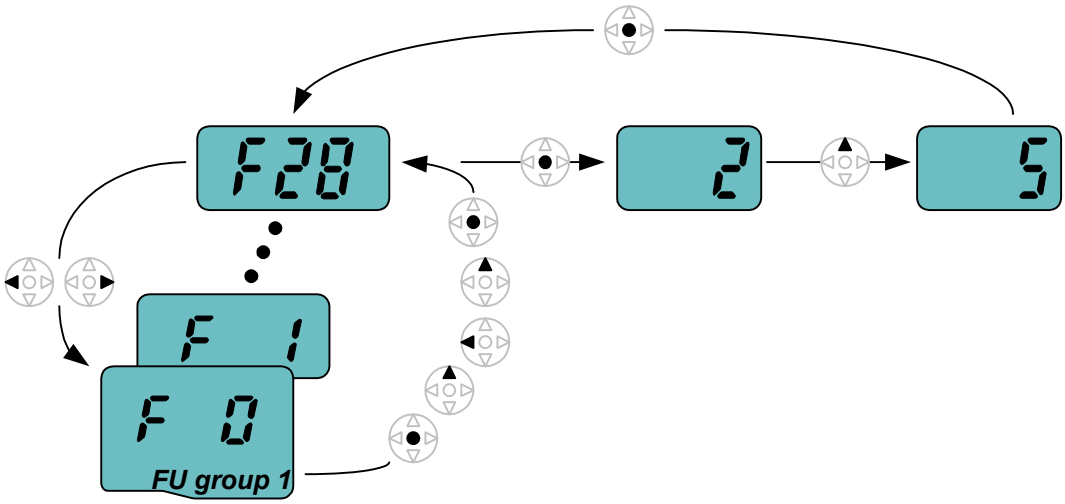

1	F 0	-. In F0, press the Ent (●) key once.
2	1	-. Check the present code number. -. Increase the value to 8 by pressing the Up (▲) key.
3	8	-. When 8 is set, press the Left (◀) key once.
4	08	-. **0** in **0**8 is active. -. Increase the value to 2 by pressing the Up (▲) key.
5	28	-. **2**8 is displayed -. Press the Ent (●) key once.
6	F 28	-. The parameter number F28 is displayed. -. Press the Ent (●) key once to check the set value.
7	2	-. The preset value 2 is displayed. -. Increase the value to 5 using UP key (▲).
8	5	-. Press the Ent (●) key.
9	F 28	-. Code number will appear after 5 is blinking. Parameter change is complete. -. Press either Left (◀) or Right (▶) keys.
10	F 0	-. Moving to first code of Function group 1 is complete.

♣ The above setting is also applied to change parameter values in function group 2 and I/O group.

4.6 Monitoring of operation status

- Output current display

Monitoring output current in Drive group

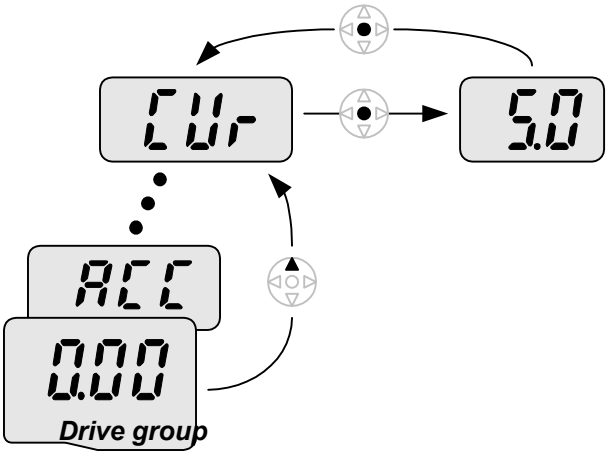

1	0.00	-. In [0.0], continue pressing the Up (▲) or Down (▼) key until [CUr] is displayed.
2	CUr	-. Monitoring output current is provided in this parameter. -. Press the Enter (●) key once to check the current.
3	5.00	-. Present output current is 5 A. -. Press the Enter (●) key once to return to the parameter name.
4	CUr	-. Return to the output current monitoring code.

♣ Other parameters in Drive group such as dCL (Inverter DC link voltage) or vOL (Inverter output voltage) can be monitored via the same method.

- Fault display

How to monitor fault condition in Drive group

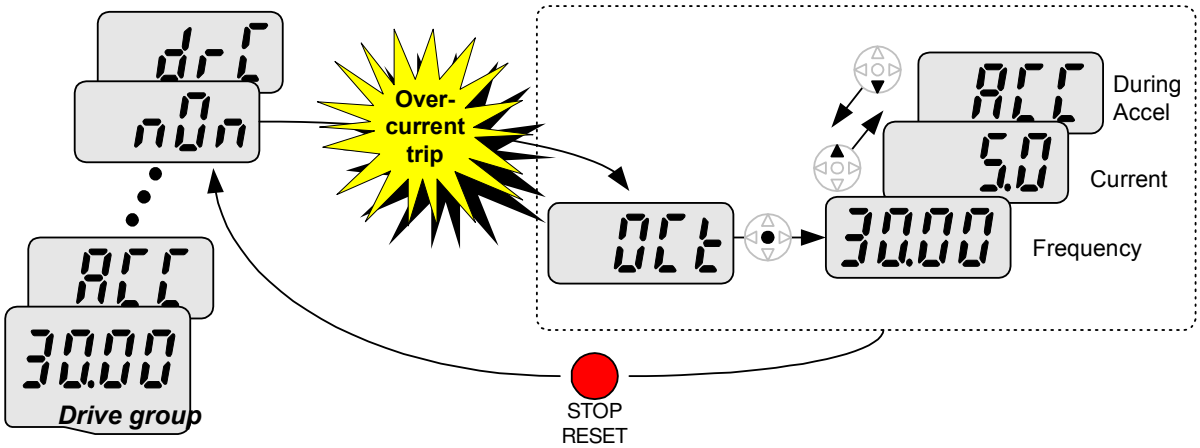

1	OCt	-. This message appears when an Overcurrent fault occurs. -. Press the Enter (●) key or UP/Down key once.
2	30.00	-. The **run frequency** at the time of fault (30.0) is displayed. -. Press the Up (▲) key once.
3	5.0	-. The **output current** at the time of fault is displayed. -. Press the Up (▲) key once.
4	ACC	-. Operating status is displayed. A fault occurred during acceleration. -. Press the STOP/RST key once.
5	nOn	-. A fault condition is cleared and “nOn” is displayed.

When more than one fault occurs at the same time

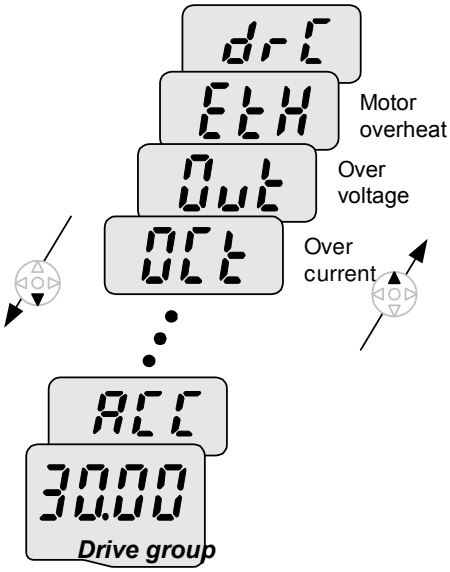

-. Maximum three faults information is displayed as shown left.

● Parameter initialize

How to initialize parameters of all four groups in H93

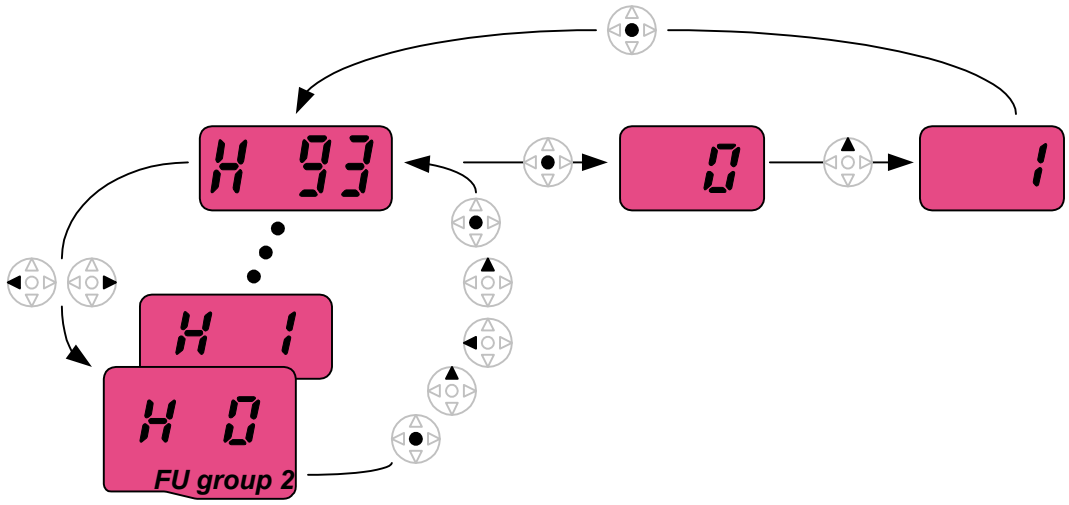

1	H 0	-. In H0, press the Enter (●) key once.
2	1	-. Code number of H0 is displayed. -. Increase the value to 3 by pressing the Up (▲) key.
3	3	-. In **3**, press the Left (◀) key once to move the cursor to the left.
4	03	-. **0**3 is displayed. **0** in **0**3 is active. -. Increase the value to 9 by pressing the Up (▲) key.
5	93	-. **9**3 is set. -. Press the Enter (●) key once.
6	H 93	-. The parameter number is displayed. -. Press the Enter (●) key once.
7	0	-. Present setting is 0. -. Press the Up (▲) key once to set to 1 to activate parameter initialize.
8	1	-. Press the Enter (●) key once.
9	H 93	-. Return to the parameter number after blinking. Parameter initialize has been complete. -. Press the either Left (◀) or Right (▶) key.
10	H 0	-. Return to H0.

4.7 Frequency Setting and Basic Operation

☞ **Caution :** The following instructions are given based on the fact that all parameters are set to factory defaults. Results could be different if parameter values are changed. In this case, initialize parameter values (see page 10-21) back to factory defaults and follow the instructions below.

● Frequency Setting via keypad & operating via terminals

1		-. Apply AC input power to the inverter.
2	0.00	-. When 0.00 appears, press the Ent (●) key once.
3	0.00	-. The second digit in 0.0**0** is lit as shown right. -. Press the Left (◀) key three times.
4	00.00	-. **0**0.00 is displayed and the first **0** is lit. -. Press the Up (▲) key.
5	10.00	-. **1**0.00 is set. Press the Ent (●) key once. -. 10.00 is blinking. Press the Ent (●) key once.
6	10.00	-. Run frequency is set to **10.00** Hz when the blinking stops. -. Turn on the switch between P1 (FX) and CM terminals.
7	10.00	-. RUN lamp begins to blink with FWD (Forward Run) lit and accelerating frequency is displayed on the LED. -. When target run frequency 10Hz is reached, **10.00** is displayed. -. Turn off the switch between P1 (FX) and CM terminals.
8	10.00	-. RUN lamp begins to blink and decelerating frequency is displayed on the LED. -. When run frequency is reached to 0Hz, Run and FWD lamp turn off and **10.00** is displayed.

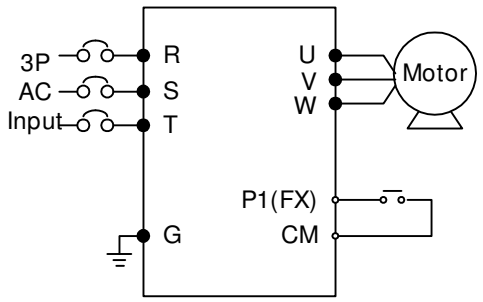

Wiring

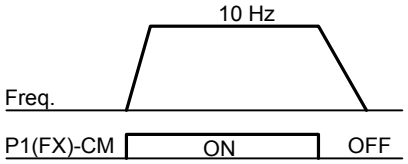

Operating pattern

● Frequency Setting via potentiometer & operating via terminals

1		-. Apply AC input power to the inverter.
2	0.00	-. When 0.00 appears Press the Up (▲) key four times.
3	Fr9	-. Frq is displayed. Frequency setting mode is selectable. -. Press the Ent (●) key once.
4	0	-. Present setting method is set to 0 (frequency setting via keypad). -. Press the Up (▲) key three times.
5	3	-. After 3 (Frequency setting via potentiometer) is set, press the Ent (●) key once.
6	Fr9	-. Frq is redisplayed after 3 stops blinking. -. Press the Down (▼) key four times. -. Turn the potentiometer to set to 10.00 Hz in either Max or Min direction.
7	10.00	-. Turn on the switch between P1 (FX) and CM (See Wiring below). -. RUN lamp begins to blink with FWD lamp lit and the accelerating frequency is displayed on the LED. -. When run frequency 10Hz is reached, the value is displayed as shown left. -. Turn off the switch between P1 (FX) and CM terminals.
8	10.00	-. RUN lamp begins to blink and decelerating frequency is displayed on the LED. -. When run frequency is reached to 0Hz, Run and FWD lamp turn off and **10.00** is displayed.

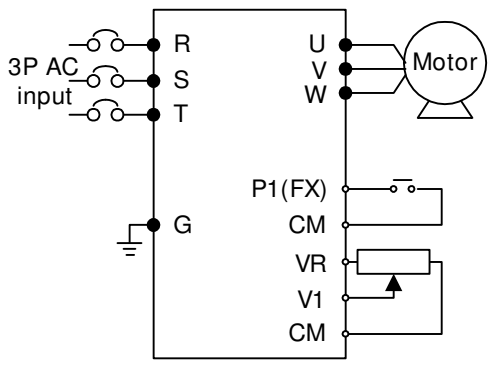

Wiring

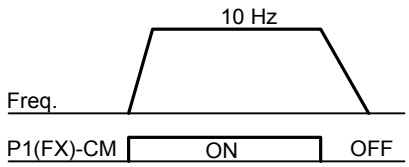

Operating pattern

- Frequency setting via potentiometer & operating via the Run key

1		-. Apply AC input power to the inverter.
2	0.00	-. When 0.00 is displayed, press the Up (▲) key three times.
3	drv	-. “drv” is displayed. Operating method is selectable. -. Press the Ent (●) key.
4	1	-. Check the present operating method (“1”: Run via control terminal). -. Down (▼) key once.
5	0	-. After setting “0”, press the Ent (●) key. When 0 is blinking, press the Ent again.
6	drv	-. “drv” is displayed after “0” is blinking. Operation method is set via the Run key on the keypad. -. Press the Up (▲) key once.
7	Frq	-. Different frequency setting method is selectable. -. Press the Ent (●) key.
8	0	-. Check the present frequency setting method (“**0**” is run via keypad). -. Press the Up (▲) key three times.
9	3	-. After checking “**3**” (frequency setting via potentiometer), press the Ent (●) key.
10	Frq	-. “**Frq**” is displayed after “3” is blinking. Frequency setting is set via the potentiometer on the keypad. -. Press the Down (▼) key four times. -. Turn the potentiometer to set to 10.0 Hz in either Max or Min direction.
11	10.00	-. Press the Run key on the keypad. -. RUN lamp begins to blink with FWD lamp lit and accelerating frequency is displayed on the LED. -. When run frequency 10Hz is reached, **10.00** is displayed as shown left. -. Press the STOP/RST key.
12	10.00	-. RUN lamp begins to blink and decelerating frequency is displayed on the LED. -. When run frequency is reached to 0Hz, Run and FWD lamp turn off and **10.00** is displayed.

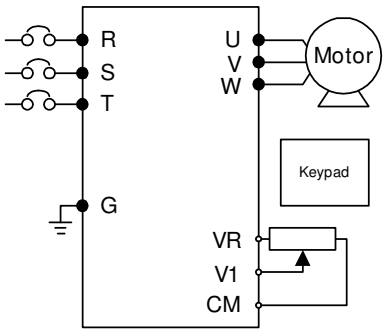

Wiring

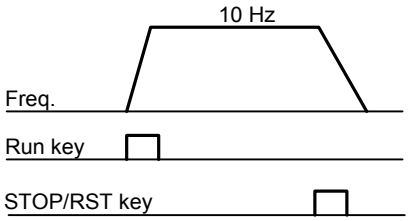

Operating pattern

MEMO

CHAPTER 5 - FUNCTION LIST

● Drive Group

LED display	Address for communication	Parameter name	Min/Max range	Description	Factory defaults	Adj. during run
0.00	A100	Frequency command	0 ~ 400 [Hz]	This parameter sets the frequency that the inverter is commanded to output. During Stop: Frequency Command During Run: Output Frequency During Multi-step operation: Multi-step frequency 0. It cannot be set greater than F21.	0.00	O
ACC	A101	Accel time	0 ~ 6000 [Sec]	During Multi-Accel/Decel operation, this parameter serves as Accel/Decel time 0.	5.0	O
dEC	A102	Decel time			10.0	O
drv	A103	Drive mode	0 ~ 4	0: Run/Stop via Run/Stop key on the kpd 1: Terminal operation — FX: Motor forward run; RX: Motor reverse run 2: Terminal operation — FX: Run/Stop enable; RX: Reverse rotation select 3: RS485 communication 4: Field bus communication[1)]	1	X
Frq	A104	Frequency setting method	0 ~ 10	0: Digital — Keypad setting 1 1: Digital — Keypad setting 2 2: Analog — V1 1: -10 ~ +10 [V] 3: Analog — V1 2: 0 ~ +10 [V] 4: Analog — I: 0 ~ 20 [mA] 5: Analog — Terminal V1 setting 1 + Terminal I 6: Analog — Terminal V1 setting 2+ Terminal I 7: RS485 communication 8: Digital Volume 9: Field bus communication[1)] 10: Pulse train[1)]	0	X
St1	A105	Multi-Step frequency 1	0 ~ 400 [Hz]	Sets Multi-Step frequency 1 during Multi-step operation.	10.00	O
St2	A106	Multi-Step frequency 2		Sets Multi-Step frequency 2 during Multi-step operation.	20.00	O
St3	A107	Multi-Step frequency 3		Sets Multi-Step frequency 3 during Multi-step operation.	30.00	O
CUr	A108	Output current		Displays the output current to the motor.	-	-
rPM	A109	Motor RPM		Displays the number of Motor RPM.	-	-

1) : This function can be available with iG5A Communication Option Module.

● Drive Group

LED display	Address for communication	Parameter name	Min/Max range	Description			Factory defaults	Adj. during run
dCL	A10A	Inverter DC link voltage		Displays DC link voltage inside the inverter			-	-
vOL	A10B	User display select		This parameter displays the item selected at H73- [Monitoring item select].			vOL	-
				vOL	Output voltage			
				POr	Output power			
				tOr	Torque			
nOn	A10C	Fault Display		Displays the types of faults, frequency and operating status at the time of the fault			-	-
drC	A10D	Direction of motor rotation select	F, r	Sets the direction of motor rotation when drv - [Drive mode] is set to either 0 or 1.			F	O
				F	Forward			
				r	Reverse			
drv2[1]	A10E	Drive mode 2	0 ~ 3	0	Run/Stop via Run/Stop key on the keypad		1	X
				1	Terminal operation	FX: Motor forward run RX: Motor reverse run		
				2		FX: Run/Stop enable RX: Reverse rotation select		
				3	RS485 communication			
				4	Field bus communication[2]			
Frq2[1]	A10F	Frequency setting method 2	0 ~ 7	0	Digital	Keypad setting 1	0	X
				1		Keypad setting 2		
				2	Analog	V1 1: -10 ~ +10 [V]		
				3		V1 2: 0 ~ +10 [V]		
				4		Terminal I: 0 ~ 20 [mA]		
				5		Terminal V1 setting 1 + Terminal I		
				6		Terminal V1 setting 2+ Terminal I		
				7	RS-485 communication			
				8	Digital Volume			
				9	Field bus communication[2]			
				10	Pulse train[2]			

[1]: Only displayed when one of the Multi-function input terminals 1-8 [I17~I24] is set to “22”.
[2]: This function can be available with iG5A Communication Option Module.

● Drive Group

LED display	Address for communication	Parameter name	Min/Max range	Description		Factory defaults	Adj. during run
rEF[1)]	A110	PID control standard value setting	0~400 [Hz] or 0~100 [%]		If H58 is 0, it is expressed as a [Hz] unit. If H58 is 1, it is expressed as a [%] unit. In [Hz] unit, you can't set Max. frequency more than (F21). In [%] unit, 100% means Max. frequency.	0.00	0
Fbk[1)]	A111	PID control feedback amount			It indicates a feedback amount in PID control. If H58 is 0, it is expressed as a [Hz] unit. If H58 is 1, it is expressed as a [%] unit.	-	-

[1)]: It is indicated when H49(PID control selection) is 1.

● Function group 1

LED display	Address for communica-tion	Parameter name	Min/Max range	Description		Factory defaults	Adj. during run
F 0	A200	Jump code	0 ~ 71	Sets the parameter code number to jump.		1	O
F 1	A201	Forward/ Reverse run disable	0 ~ 2	0	Fwd and rev run enable	0	X
				1	Forward run disable		
				2	Reverse run disable		
F 2	A202	Accel pattern	0 ~ 1	0	Linear	0	X
F 3	A203	Decel pattern		1	S-curve		
F 4	A204	Stop mode select	0 ~ 3	0	Decelerate to stop	0	X
				1	DC brake to stop		
				2	Free run to stop		
				3	Power Braking stop		
F 8[1)]	A208	DC Brake start frequency	0.1 ~ 60 [Hz]	This parameter sets DC brake start frequency. It cannot be set below F23 - [Start frequency].		5.00	X
F 9	A209	DC Brake wait time	0 ~ 60 [sec]	When DC brake frequency is reached, the inverter holds the output for the setting time before starting DC brake.		0.1	X
F10	A20A	DC Brake voltage	0 ~ 200 [%]	This parameter sets the amount of DC voltage applied to a motor. It is set in percent of H33 – [Motor rated current].		50	X
F11	A20B	DC Brake time	0 ~ 60 [sec]	This parameter sets the time taken to apply DC current to a motor while motor is at a stop.		1.0	X
F12	A20C	DC Brake start voltage	0 ~ 200 [%]	This parameter sets the amount of DC voltage before a motor starts to run. It is set in percent of H33 – [Motor rated current].		50	X
F13	A20D	DC Brake start time	0 ~ 60 [sec]	DC voltage is applied to the motor for DC Brake start time before motor accelerates.		0	X
F14	A20E	Time for magnetizing a moto]	0 ~ 60 [sec]	This parameter applies the current to a motor for the set time before motor accelerates during Sensorless vector control.		0.1	X
F20	A214	Jog frequency	0 ~ 400 [Hz]	This parameter sets the frequency for Jog operation. It cannot be set above F21 – [Max frequency].		10.00	O

1): Only displayed when F 4 is set to 1 (DC brake to stop).

Function group 1

LED display	Address for communication	Parameter name	Min/Max range	Description	Factory defaults	Adj. during run
F21 [1)]	A215	Max frequency	40 ~ 400 [Hz]	This parameter sets the highest frequency the inverter can output. It is frequency reference for Accel/Decel (See H70) ⚠ Caution Any frequency cannot be set above Max frequency except Base frequency	60.00	X
F22	A216	Base frequency	30 ~ 400 [Hz]	The inverter outputs its rated voltage to the motor at this frequency (see motor nameplate).	60.00	X
F23	A217	Start frequency	0.1 ~ 10 [Hz]	The inverter starts to output its voltage at this frequency. It is the frequency low limit.	0.50	X
F24	A218	Frequency high/low limit select	0 ~ 1	This parameter sets high and low limit of run frequency.	0	X
F25 [2)]	A219	Frequency high limit	0 ~ 400 [Hz]	This parameter sets high limit of the run frequency. It cannot be set above F21 – [Max frequency].	60.00	X
F26	A21A	Frequency low limit	0.1 ~ 400 [Hz]	This parameter sets low limit of the run frequency. It cannot be set above F25 - [Frequency high limit] and below F23 – [Start frequency].	0.50	X
F27	A21B	Torque Boost select	0 ~ 1	0 Manual torque boost 1 Auto torque boost	0	X
F28	A21C	Torque boost in forward direction	0 ~ 15 [%]	This parameter sets the amount of torque boost applied to a motor during forward run. It is set in percent of Max output voltage.	2	X
F29	A21D	Torque boost in reverse direction		This parameter sets the amount of torque boost applied to a motor during reverse run. It is set as a percent of Max output voltage	2	X

[1)]: If H40 is set to 3 (Sensorless vector), Max. frequency is settable up to 300Hz.

[2)]: Only displayed when F24 (Frequency high/low limit select) is set to 1.

Function group 1

LED display	Address for communication	Parameter name	Min/Max range	Description	Factory defaults	Adj. during run
F30	A21E	V/F pattern	0 ~ 2	0 Linear 1 Square 2 User V/F	0	X
F31[1)]	A21F	User V/F frequency 1	0 ~ 400 [Hz]	It is used only when V/F pattern is set to 2(User V/F) It cannot be set above F21 – [Max frequency]. The value of voltage is set in percent of H70 – [Motor rated voltage]. The values of the lower-numbered parameters cannot be set above those of higher-numbered.	15.00	X
F32	A220	User V/F voltage 1	0 ~ 100 [%]		25	X
F33	A221	User V/F frequency 2	0 ~ 400 [Hz]		30.00	X
F34	A222	User V/F voltage 2	0 ~ 100 [%]		50	X
F35	A223	User V/F frequency 3	0 ~ 400 [Hz]		45.00	X
F36	A224	User V/F voltage 3	0 ~ 100 [%]		75	X
F37	A225	User V/F frequency 4	0 ~ 400 [Hz]		60.00	X
F38	A226	User V/F voltage 4	0 ~ 100 [%]		100	X
F39	A227	Output voltage adjustment	40 ~ 110 [%]	This parameter adjusts the amount of output voltage. The set value is the percentage of input voltage.	100	X
F40	A228	Energy-saving level	0 ~ 30 [%]	This parameter decreases output voltage according to load status.	0	0
F50	A232	Electronic thermal select	0 ~ 1	This parameter is activated when the motor is overheated (time-inverse).	0	0

[1)]: Set F30 to 2(User V/F) to display this parameter.

Function group 1

LED display	Address for communication	Parameter name	Min/Max range	Description	Factory defaults	Adj. during run
F51 [1)]	A233	Electronic thermal level for 1 minute	50 ~ 200 [%]	This parameter sets max current capable of flowing to the motor continuously for 1 minute. The set value is the percentage of H33 – [Motor rated current]. It cannot be set below F52 –[Electronic thermal level for continuous].	150	0
F52	A234	Electronic thermal level for continuous	50 ~ 150 [%]	This parameter sets the amount of current to keep the motor running continuously. It cannot be set higher than F51 – [Electronic thermal level for 1 minute].	100	0
F53	A235	Motor cooling method	0 ~ 1	0 Standard motor having cooling fan directly connected to the shaft 1 A motor using a separate motor to power a cooling fan.	0	0
F54	A236	Overload warning level	30 ~ 150 [%]	This parameter sets the amount of current to issue an alarm signal at a relay or multi-function output terminal (see I54, I55). The set value is the percentage of H33- [Motor rated current].	150	0
F55	A237	Overload warning time	0 ~ 30 [Sec]	This parameter issues an alarm signal when the current greater than F54- [Overload warning level] flows to the motor for F55- [Overload warning time].	10	0
F56	A238	Overload trip select	0 ~ 1	This parameter turns off the inverter output when motor is overloaded.	1	0
F57	A239	Overload trip level	30 ~ 200 [%]	This parameter sets the amount of overload current. The value is the percentage of H33- [Motor rated current].	180	0
F58	A23A	Overload trip time	0 ~ 60 [Sec]	This parameter turns off the inverter output when the F57- [Overload trip level] of current flows to the motor for F58- [Overload trip time].	60	0

[1)]: Set F50 to 1 to display this parameter.

● Function group 1

LED display	Address for communication	Parameter name	Min/Max range	Description	Factory defaults	Adj. during run
F59	A23B	Stall prevention select	0 ~ 7	This parameter stops accelerating during acceleration, decelerating during constant speed run and stops decelerating during deceleration. During Decel / During constant run / During Accel Bit 2 / Bit 1 / Bit 0 0: - - - 1: - - ✓ 2: - ✓ - 3: - ✓ ✓ 4: ✓ - - 5: ✓ - ✓ 6: ✓ ✓ - 7: ✓ ✓ ✓	0	X
F60	A23C	Stall prevention level	30 ~ 200 [%]	This parameter sets the amount of current to activate stall prevention function during Accel, Constant or Decel run. The set value is the percentage of the H33- [Motor rated current].	150	X
F61 [1)]	A23D	When Stall prevention during deceleration, voltage limit select	0~1	In Stall prevention run during deceleration, if you want to limit output voltage, select 1		
F63	A23F	Save up/down frequency select	0 ~ 1	This parameter decides whether to save the specified frequency during up/down operation. When 1 is selected, the up/down frequency is saved in F64.	0	X
F64 [2)]	A240	Save up/down frequency		If 'Save up/down frequency' is selected at F63, this parameter saves the frequency before the inverter stops or decelerated.	0.00	X
F65	A241	Up-down mode select	0~2	We can select up-down mode among three thing 0: Increases goal frequency as a standard of Max. frequency/Min. frequency 1: Increases as many as step frequency according to edge input 2: Available to combine 1 and 2	0	X

[1)]: It is indicated when setting bit 2 of F59 as 1
[2)]: Set F63 to 1 to display this parameter.

- Function group 1

LED display	Address for communication	Parameter name	Min/Max range	Description		Factory defaults	Adj. during run
F66	A242	Up-down step frequency	0~400 [Hz]	In case of choosing F65 as a 1 or 2, it means increase or decrease of frequency according to up-down input		0.00	X
F70	A246	Draw run mode select	0~3	0	Inverter doesn't run as a draw mode	0	X
				1	V1(0~10V) input draw run		
				2	I(0~20mA) input draw run		
				3	V1(-10~10V) input draw run		
F71	A247	Draw rate	0~100 [%]	Sets rate of draw		0.00	0

● Function group 2

LED display	Address for communication	Parameter name	Min/Max range	Description	Factory defaults	Adj. during run
H 0	A300	Jump code	0~95	Sets the code number to jump.	1	O
H 1	A301	Fault history 1	-	Stores information on the types of faults, the frequency, the current and the Accel/Decel condition at the time of fault. The latest fault is automatically stored in the H 1- [Fault history 1].	nOn	-
H 2	A302	Fault history 2	-		nOn	-
H 3	A303	Fault history 3	-		nOn	-
H 4	A304	Fault history 4	-		nOn	-
H 5	A305	Fault history 5	-		nOn	-
H 6	A306	Reset fault history	0~1	Clears the fault history saved in H 1-5.	0	O
H 7	A307	Dwell frequency	0.1~400 [Hz]	When run frequency is issued, motor starts to accelerate after dwell frequency is applied to the motor during H8- [Dwell time]. [Dwell frequency] can be set within the range of F21- [Max frequency] and F23- [Start frequency].	5.00	X
H 8	A308	Dwell time	0~10 [sec]	Sets the time for dwell operation.	0.0	X
H10	A30A	Skip frequency select	0 ~ 1	Sets the frequency range to skip to prevent undesirable resonance and vibration on the structure of the machine.	0	X
H11[1)]	A30B	Skip frequency low limit 1	0.1~400 [Hz]	Run frequency cannot be set within the range of H11 thru H16. The frequency values of the low numbered parameters cannot be set above those of the high numbered ones. Settable within the range of F21 and F23.	10.00	X
H12	A30C	Skip frequency high limit 1			15.00	X
H13	A30D	Skip frequency low limit 2			20.00	X
H14	A30E	Skip frequency high limit 2			25.00	X
H15	A30F	Skip frequency low limit 3			30.00	X
H16	A310	Skip frequency high limit 3			35.00	X

[1)]: only displayed when H10 is set to 1. # H17, H18 are used when F2, F3 are set to 1 (S-curve).

● Function group 2

LED display	Address for communication	Parameter name	Min/Max range	Description	Factory defaults	Adj. during run
H17	A311	S-Curve accel/decel start side	1~100 [%]	Set the speed reference value to form a curve at the start during accel/decel. If it is set higher, linear zone gets smaller.	40	X
H18	A312	S-Curve accel/decel end side	1~100 [%]	Set the speed reference value to form a curve at the end during accel/decel. If it is set higher, linear zone gets smaller.	40	X
H19	A313	Input/output phase loss protection select	0 ~ 3		0	O

	Bit 1	Bit 0
Disable	-	-
Output phase protection	-	✓
Input phase protection	✓	-
Input/Output phase protection	✓	✓

H20	A314	Power On Start select	0 ~ 1	This parameter is activated when drv is set to 1 or 2 (Run/Stop via Control terminal). Motor starts acceleration after AC power is applied while FX or RX terminal is ON.	0	O
H21	A315	Restart after fault reset selection	0 ~1	This parameter is activated when drv is set to 1 or 2 (Run/Stop via Control terminal). Motor accelerates after the fault condition is reset while the FX or RX terminal is ON.	0	O
H22 [1)]		Speed Search Select	0 ~ 15	This parameter is active to prevent any possible fault when the inverter outputs its voltage to the running motor.	0	O

	1. H20-[Power On start]	2. Restart after instant power failure	3. Operation after fault	4. Normal accel
	Bit 3	Bit 2	Bit 1	Bit 0
0	-	-	-	-
1	-	-	-	✓
2	-	-	✓	-
3	-	-	✓	✓
4	-	✓	-	-

[1)] Normal acceleration has first priority. Even though #4 is selected along with other bits, Inverter performs Speed search #4.

● Function group 2

LED display	Address for communication	Parameter name	Min/Max range	Description	Factory defaults	Adj. during run
H22 1)	A316			1. H20-Power On start / 2. Restart after instant power failure / 3. Operation after fault / 4. Normal accel Bit 3 / Bit 2 / Bit 1 / Bit 0 5: - / ✓ / - / ✓ 6: - / ✓ / ✓ / - 7: - / ✓ / ✓ / ✓ 8: ✓ / - / - / - 9: ✓ / - / - / ✓ 10: ✓ / - / ✓ / - 11: ✓ / - / ✓ / ✓ 12: ✓ / ✓ / - / - 13: ✓ / ✓ / - / ✓ 14: ✓ / ✓ / ✓ / - 15: ✓ / ✓ / ✓ / ✓	0	O
H23	A317	Current level during Speed search	80~200 [%]	This parameter limits the amount of current during speed search. The set value is the percentage of the H33- [Motor rated current].	100	O
H24	A318	P gain during Speed search	0~9999	It is the Proportional gain used for Speed Search PI controller.	100	O
H25	A319	I gain during speed search	0~9999	It is the Integral gain used for Speed search PI controller.	200	O
H26	A31A	Number of Auto Restart try	0 ~10	This parameter sets the number of restart tries after a fault occurs. Auto Restart is deactivated if the fault outnumbers the restart tries. This function is active when [drv] is set to 1 or 2 {Run/Stop via control terminal}. Deactivated during active protection function (OHT, LVT, EXT, HWT etc.).	0	O

● Function group 2

LED display	Address for communication	Parameter name	Min/Max range	Description	Factory defaults	Adj. during run
H27	A31B	Auto Restart time	0~60 [sec]	This parameter sets the time between restart tries.	1.0	O
H30	A31E	Motor type select	0.2~ 22.0	0.2 — 0.2kW ~ — ~ 22.0 — 22.0kW	**7.5**[1)]	X
H31	A31F	Number of motor poles	2 ~ 12	This setting is displayed via rPM in drive group.	4	X
H32	A320	Rated slip frequency	0 ~ 10 [Hz]	$f_s = f_r - \left(\frac{rpm \times P}{120}\right)$ Where, f_s = Rated slip frequency f_r = Rated frequency rpm = Motor nameplate RPM P = Number of Motor poles	**2.33** [2)]	X
H33	A321	Motor rated current	0.5~150 [A]	Enter motor rated current on the nameplate.	**26.3**	X
H34	A322	No Load Motor Current	0.1~ 50 [A]	Enter the current value detected when the motor is rotating in rated rpm after the load connected to the motor shaft is removed. Enter the 50% of the rated current value when it is difficult to measure H34 – [No Load Motor Current].	**11**	X
H36	A324	Motor efficiency	50~100 [%]	Enter the motor efficiency (see motor nameplate).	**87**	X
H37	A325	Load inertia rate	0 ~ 2	Select one of the following according to motor inertia.	0	X
				0 — Less than 10 times 1 — About 10 times 2 — More than 10 times	0	X
H39	A327	Carrier frequency select	1 ~ 15 [kHz]	This parameter affects the audible sound of the motor, noise emission from the inverter, inverter temp, and leakage current. If the set value is higher, the inverter sound is quieter but the noise from the inverter and leakage current will become greater.	3	O

[1)]: H30 is preset based on inverter rating.

[2)]: H32 ~ H36 factory default values are set based on OTIS-LG motor.

● Function group 2

LED display	Address for communication	Parameter name	Min/Max range	Description		Factory defaults	Adj. during run
H40	A328	Control mode select	0 ~ 3	0	Volts/frequency Control	0	X
				1	Slip compensation control		
				3	Sensorless vector control		
H41	A329	Auto tuning	0 ~ 1	If this parameter is set to 1, it automatically measures parameters of the H42 and H44.		0	X
H42	A32A	Stator resistance (Rs)	0 ~ 28 [Ω]	This is the value of the motor stator resistance.		-	X
H44	A32C	Leakage inductance (Lσ)	0~ 300.0 [mH]	This is leakage inductance of the stator and rotor of the motor.		-	X
H45 [1)]	A32D	Sensorless P gain	0~ 32767	P gain for Sensorless control		1000	O
H46	A32E	Sensorless I gain		I gain for Sensorless control		100	O
H47	A32F	Sensorless torque limit	100~220 [%]	Limits output torque in sensorless mode,.		180.0	X
H48	A330	PWM mode select	0~1	If you want to limit a inverter leakage current, select 2 phase PWM mode. It has more noise in comparison to Normal PWM mode.		0	X
				0	Normal PWM mode		
				1	2 phase PWM mode		
H49	A331	PID select	0~1	Selects whether using PID control or not		0	X
H50 [2)]	A332	PID F/B select	0 ~ 3	0	Terminal I input (0 ~ 20 mA)	0	X
				1	Terminal V1 input (0 ~ 10 V)		
				2	RS-485		
				3	Pulse in [3)]		
H51	A333	P gain for PID	0~ 999.9[%]	This parameter sets the gains for the PID controller.		300.0	O
H52	A334	Integral time for PID	0.1~32.0 [sec]			1.0	O
H53	A335	Differential time for PID	0 ~ 30.0 [sec]			0.0	O
H54	A336	PID control mode select	0~1	Selects PID control mode		0	X
				0	Normal PID control		
				1	Process PID control		

[1)]: Set H40 to 3 (Sensorless vector control) to display this parameter.
[2)]: Set H49 to 1 (PID control) to display this parameter.
[3)]: This function can be available with iG5A Communication Option Module.

● Function group 2

LED display	Address for communication	Parameter name	Min/Max range	Description	Factory defaults	Adj. during run
H55	A337	PID output frequency high limit	0.1 ~ 400 [Hz]	This parameter limits the amount of the output frequency through the PID control. The value is settable within the range of F21 – [Max frequency] and F23 – [Start frequency].	60.00	O
H56	A338	PID output frequency low limit	0.1 ~ 400 [Hz]		0.50	O
H57	A339	PID standard value select	0~5	Selects PID standard value. Standard value is indicated in “rEF” of Drive group. 0 Loader digital setting 1 1 Loader digital setting 2 2 V1 terminal setting 2: 0~10V 3 I terminal setting: 0~20mA 4 Pulse in 5 RS-485 communication	0	X
H58	A33A	PID control unit select	0~1	Selects a unit of the standard value or feedback amount. 0 Frequency[Hz] 1 Percentage[%]	0	X
H60	A33C	Self-diagnostic select	0 ~ 3	0 Self-diagnostic disabled 1 IGBT fault/Ground fault 2 Output phase short & open/ Ground fault 3 Ground fault (This setting is unable when more than 11kW)	0	X
H61[1)]	A33D	Sleep delay time	0~2000 [s]	Sets a sleep delay time in PID drive.	60.0	X
H62	A33E	Sleep frequency	0~400 [Hz]	Sets a sleep frequency when executing a sleep function in PID control drive. You can’t set more than Max. frequency(F21)	0.00	O
H63	A33F	Wake up level	0~100 [%]	Sets a wake up level in PID control drive.	35.0	O
H64	A340	KEB drive select	0~1	Sets KEB drive.	0	X
H65 [2)]	A341	KEB action start level	110~140 [%]	Sets KEB action start level according to level.	125.0	X
H66	A342	KEB action stop level	110~145 [%]	Sets KEB action stop level according to level.	130.0	X
H67	A343	KEB action gain	1~20000	Sets KEB action gain.	1000	X

[1)]: Set H49 as a 1 to display this parameter.
[2)]: It is indicated when setting H64(KEB drive select) as a 1
(KEB does not operate when cut power after loading ting input (about 10%).

● Function group 2

LED display	Address for communication	Parameter name	Min/Max range	Description		Factory defaults	Adj. during run
H70	A346	Frequency Reference for Accel/Decel	0 ~ 1	0	Based on Max freq (F21)	0	X
				1	Based on Delta freq.		
H71	A347	Accel/Decel time scale	0 ~ 2	0	Settable unit: 0.01 second.	1	O
				1	Settable unit: 0.1 second.		
				2	Settable unit: 1 second.		
H72	A348	Power on display	0 ~ 15	This parameter selects the parameter to be displayed on the keypad when the input power is first applied.		0	O
				0	Frequency command		
				1	Accel time		
				2	Decel time		
				3	Drive mode		
				4	Frequency mode		
				5	Multi-Step frequency 1		
				6	Multi-Step frequency 2		
				7	Multi-Step frequency 3		
				8	Output current		
				9	Motor rpm		
				10	Inverter DC link voltage		
				11	User display select (H73)		
				12	Fault display		
				13	Direction of motor rotation		
				14	Output current 2		
				15	Motor rpm 2		
				16	Inverter DC link voltage 2		
				17	User display select 2		
H73	A349	Monitoring item select	0 ~ 2	One of the following can be monitored via vOL - [User display select].		0	O
				0	Output voltage [V]		
				1	Output power [kW]		
				2	Torque [kgf · m]		
H74	A34A	Gain for Motor rpm display	1 ~ 1000 [%]	This parameter is used to change the motor rotating speed (r/min) to mechanical speed (m/mi) and display it.		100	O
H75	A34B	DB resistor operating rate limit select	0 ~ 1	0	Unlimited	1	O
				1	Use DB resistor for the H76 set time.		

● Function group 2

LED display	Address for communication	Parameter name	Min/Max range	Description	Factory defaults	Adj. during run
H76	A34C	DB resistor operating rate	0 ~ 30[%]	Set the percent of DB resistor operating rate to be activated during one sequence of operation.	10	O
H77[1)]	A34D	Cooling fan control	0 ~ 1	0 Always ON 1 Keeps ON when its temp is higher than inverter protection limit temp. Activated only during operation when its temp is below that of inverter protection limit.	0	O
H78	A34E	Operating method select when cooling fan malfunctions	0 ~ 1	0 Continuous operation when cooling fan malfunctions. 1 Operation stopped when cooling fan malfunctions.	0	O
H79	A34F	[S/W version]	0 ~ 10.0	This parameter displays the inverter software version.	1.0	X
H81[2)]	A351	2nd motor Accel time	0 ~ 6000 [sec]	This parameter actives when the selected terminal is ON after I17-I24 is set to 12 {2nd motor select}.	5.0	O
H82	A352	2nd motor Decel time			10.0	O
H83	A353	2nd motor base frequency	30 ~ 400 [Hz]		60.00	X
H84	A354	2nd motor V/F pattern	0 ~ 2		0	X
H85	A355	2nd motor forward torque boost	0 ~ 15 [%]		5	X
H86	A356	2nd motor reverse torque boost			5	X
H87	A347	2nd motor stall prevention level	30~150 [%]		150	X
H88	A358	2nd motor Electronic thermal level for 1 min	50~200 [%]		150	O
H89	A359	2nd motor Electronic thermal level for continuous	50~150 [%]		100	O
H90	A35A	2nd motor rated current	0.1~100 [A]		26.3	X

[1)] Exception: Since SV004iG5A-2/SV004iG5A-4 is Natural convection type, this code is hidden.
[2)]: It is indicated when choosing I17~I24 as a 12 (2nd motor select).

● Function group 2

LED display	Address for communication	Parameter name	Min/Max range	Description		Factory defaults	Adj. during run
H91[1]	A35B	Parameter read	0 ~ 1	Copy the parameters from inverter and save them into remote loader.		0	X
H92	A35C	Parameter write	0 ~ 1	Copy the parameters from remote loader and save them into inverter.		0	X
H93	A35D	Parameter initialize	0 ~ 5	This parameter is used to initialize parameters back to the factory default value.		0	X
				0	-		
				1	All parameter groups are initialized to factory default value.		
				2	Only Drive group is initialized.		
				3	Only Function group 1 is initialized.		
				4	Only Function group 2 is initialized.		
				5	Only I/O group is initialized.		
				6[2]	Only Communication group is initialized.		
H94	A35E	Password register	0 ~ FFFF	Password for H95-[Parameter lock]. Set as Hexa value.		0	O
H95	A35F	Parameter lock	0 ~ FFFF	This parameter is able to lock or unlock parameters by typing password registered in H94.		0	O
				UL (Unlock)	Parameter change enable		
				L (Lock)	Parameter change disable		

[1] H91,H92 parameters are displayed when Remote option is installed.
[2] This function can be available with iG5A Communication Option Module

- Input/output group

LED display	Address for communication	Parameter name	Min/Max range	Description	Factory defaults	Adj. during run
I 0	A400	Jump code	0 ~ 94	Sets the code number to jump.	1	O
I 2	A402	NV input Min voltage	0 ~ -10 [V]	Sets the minimum voltage of the NV (-10V~0V) input.	0.00	O
I 3	A403	Frequency corresponding to I 2	0 ~ 400 [Hz]	Sets the inverter output minimum frequency at minimum voltage of the NV input.	0.00	O
I 4	A404	NV input Max voltage	0 ~ -10 [V]	Sets the maximum voltage of the NV input.	10.0	O
I 5	A405	Frequency corresponding to I 4	0 ~ 400 [Hz]	Sets the inverter output maximum frequency at maximum voltage of the NV input.	60.00	O
I 6	A406	Filter time constant for V1 input	0 ~ 9999	Adjusts the responsiveness of V1 input (0 ~ +10V).	10	O
I 7	A407	V1 input Min voltage	0 ~ 10 [V]	Sets the minimum voltage of the V1 input.	0	O
I 8	A408	Frequency corresponding to I 7	0 ~ 400 [Hz]	Sets the inverter output minimum frequency at minimum voltage of the V1 input.	0.00	O
I 9	A409	V1 input Max voltage	0 ~ 10 [V]	Sets the maximum voltage of the V1 input.	10	O
I10	A40A	Frequency corresponding to I 9	0 ~ 400 [Hz]	Sets the inverter output maximum frequency at maximum voltage of the V1 input.	60.00	O
I11	A40B	Filter time constant for I input	0 ~ 9999	Sets the input section's internal filter constant for I input.	10	O
I12	A40C	I input Min current	0 ~ 20 [mA]	Sets the minimum current of I input.	4.00	O
I13	A40D	Frequency corresponding to I 12	0 ~ 400 [Hz]	Sets the inverter output minimum frequency at minimum current of I input.	0.00	O
I14	A40E	I input Max current	0 ~ 20 [mA]	Sets the Maximum current of I input.	20.00	O
I15	A40F	Frequency corresponding to I 14	0 ~ 400 [Hz]	Sets the inverter output maximum frequency at maximum current of I input.	60.00	O
I16	A410	Criteria for Analog Input Signal loss	0 ~ 2	0: Disabled 1: activated below half of set value. 2: activated below set value.	0	O

- Input/output group

LED display	Address for communication	Parameter name	Min/Max range	Description		Factory defaults	Adj. during run
I17	A411	Multi-function input terminal P1 define	0 ~ 27	0	Forward run command	0	O
				1	Reverse run command		
I18	A412	Multi-function input terminal P2 define		2	Emergency Stop Trip	1	O
				3	Reset when a fault occurs {RST}		
I19	A413	Multi-function input terminal P3 define		4	Jog operation command	2	O
				5	Multi-Step freq – Low		
I20	A414	Multi-function input terminal P4 define		6	Multi-Step freq – Mid	3	O
				7	Multi-Step freq – High		
I21	A415	[Multi-function input terminal P5 define		8	Multi Accel/Decel – Low	4	O
				9	Multi Accel/Decel – Mid		
I22	A416	Multi-function input terminal P6 define		10	Multi Accel/Decel – High	5	O
				11	DC brake during stop		
				12	2nd motor select		
				13	-Reserved-		
				14	-Reserved-		
				15	Frequency increase command (UP)		
				16	Frequency decrease command (DOWN)		
				17	3-wire operation		
				18	External trip: A Contact (EtA)		
				19	External trip: B Contact (EtB)		
				20	Self-diagnostic function		
				21	Change from PID operation to V/F operation		
				22	2nd Source		
				23	Analog Hold		
				24	Accel/Decel Disable		
				25	Up/Down Save Freq. Initialization		
				26	JOG-FX		
				27	JOG-RX		

LED display	Address for communication	Parameter name	Min/Max range								Factory defaults	Adj. during run
I25	A419	Input terminal status display	BIT 7	BIT 6	BIT 5	BIT 4	BIT 3	BIT 2	BIT 1	BIT 0	0	O
			-	-	P6	P5	P4	P3	P2	P1		
I26	A41A	Output terminal status display	BIT1				BIT0				0	O
			3AC				MO					

* See “Chapter 7 Troubleshooting and maintenance” for External trip A/B contact.

* Each multi-function input terminal must be set differently.

● Input/output group

LED display	Address for communication	Parameter name	Min/Max range	Description	Factory default	Adj. during run
I27	A41B	Filtering time constant for Multi-function Input terminal	1 ~ 15	If the value is set higher, the responsiveness of the Input terminal is getting slower.	4	O
I30	A41E	Multi-Step frequency	0 ~ 400 [Hz]	It cannot be set greater than F21 – [Max frequency].	30.00	O
I31	A41F	Multi-Step frequency 5			25.00	O
I32	A420	Multi-Step frequency 6			20.00	O
I33	A421	Multi-Step frequency 7			15.00	O
I34	A422	Multi-Accel time 1	0~ 6000 [sec]		3.0	O
I35	A423	Multi-Decel time 1			3.0	
I36	A424	Multi-Accel time 2			4.0	
I37	A425	Multi-Decel time 2			4.0	
I38	A426	Multi-Accel time 3			5.0	
I39	A427	Multi-Decel time 3			5.0	
I40	A428	Multi-Accel time 4			6.0	
I41	A429	Multi-Decel time 4			6.0	
I42	A42A	Multi-Accel time 5			7.0	
I43	A42B	Multi-Decel time 5			7.0	
I44	A42C	Multi-Accel time 6			8.0	
I45	A42D	Multi-Decel time 6			8.0	
I46	A42E	Multi-Accel time 7			9.0	
I47	A42F	Multi-Decel time 7			9.0	
I50	A432	Analog output item select	0 ~ 3	Output item: Output to 10[V] (200V / 400V) 0 Output freq. Max frequency 1 Output curr. 150 % 2 Output volt. AC 282V / AC 564V 3 Inverter DC link voltage DC 400V / DC 800V	0	O
I51	A433	Analog output level adjustment	10~200 [%]	Based on 10V.	100	O
I52	A434	Frequency detection level	0 ~ 400 [Hz]	Used when I54 or I55 is set to 0-4. Cannot be set higher than F21.	30.00	O
I53	A435	Frequency detection bandwidth			10.00	O

● Input/output group

LED display	Address for communication	Parameter name	Min/Max range	Description				Factory default	Adj. during run
I54	A436	Multi-function output terminal select	0 ~ 19	0	FDT-1			12	O
				1	FDT-2				
				2	FDT-3				
				3	FDT-4				
I55	A437	Multi-function relay select		4	FDT-5			17	
				5	Overload (OLt)				
				6	Inverter Overload (IOLt)				
				7	Motor stall (STALL)				
				8	Over voltage trip (Ovt)				
				9	Low voltage trip (Lvt)				
				10	Inverter Overheat (OHt)				
				11	Command loss				
				12	During Run				
				13	During Stop				
				14	During constant run				
				15	During speed searching				
				16	Wait time for run signal input				
				17	Multi-function relay select				
				18	Warning for cooling fan trip				
				19	Brake signal select				
I56	A438	Fault relay output	0 ~ 7		When setting the H26–[Number of auto restart try]	When the trip other than low voltage trip occurs	When the low voltage trip occurs	2	O
					Bit 2	Bit 1	Bit 0		
				0	-	-	-		
				1	-	-	✓		
				2	-	✓	-		
				3	-	✓	✓		
				4	✓	-	-		
				5	✓	-	✓		
				6	✓	✓	-		
				7	✓	✓	✓		

- Input/Output Group

LED display	Address for communication	Parameter name	Min/Max range	Description	Factory defaults	Adj. during run
I57	A439	Output terminal select when communication error occurs]	0 ~ 3	Multi-function relay / Multi-function output terminal Bit 1 / Bit 0 0: - / - 1: - / ✓ 2: ✓ / - 3: ✓ / ✓	0	O
I59	A43B	Communication protocol select	0 ~ 1	Set communication protocol. 0 Modbus RTU 1 LS BUS	0	X
I60	A43C	Inverter number	1 ~ 250	Set for RS485 communication	1	O
I61	A43D	Baud rate	0 ~ 4	Select the Baud rate of the RS485. 0 1200 [bps] 1 2400 [bps] 2 4800 [bps] 3 9600 [bps] 4 19200 [bps]	3	O
I62	A43E	Drive mode select after loss of frequency command	0 ~ 2	It is used when freq command is given via V1 /I terminal or RS485. 0 Continuous operation at the frequency before its command is lost. 1 Free Run stop (Output cut-off) 2 Decel to stop	0	O
I63	A43F	Wait time after loss of frequency command	0.1 ~ 120 [sec]	This is the time inverter determines whether there is the input frequency command or not. If there is no frequency command input during this time, inverter starts operation via the mode selected at I62.	1.0	O
I64	A440	Communication time setting	2 ~ 100 [ms]	Frame communication time	5	O
I65	A441	Parity/stop bit setting	0~3	When the protocol is set, the communication format can be set. 0 Parity: None, Stop Bit: 1 1 Parity: None, Stop Bit: 2 2 Parity: Even, Stop Bit: 1 3 Parity: Odd, Stop Bit: 1	0	O

- Input/Output Group

LED display	Address for communication	Parameter name	Min/Max range	Description	Factory defaults	Adj. during run
I66	A442	Read address register 1	0~42239	The user can register up to 8 discontinuous addresses and read them all with one Read command.	5	O
I67	A443	Read address register 2			6	
I68	A444	Read address register 3			7	
I69	A445	Read address register 4			8	
I70	A446	Read address register 5			9	
I71	A447	Read address register 6			10	
I72	A448	Read address register 7			11	
I73	A449	Read address register 8			12	
I74	A44A	Write address register 1	0~42239	The user can register up to 8 discontinuous addresses and write them all with one Write command.	5	O
I75	A44B	Write address register 2			6	
I76	A44C	Write address register 3			7	
I77	A44D	Write address register 4			8	
I78	A44E	Write address register 5			5	
I79	A44F	Write address register 6			6	
I80	A450	Write address register 7			7	
I81	A451	Write address register 8			8	

- Input/Output Group

LED display	Address for communication	Parameter name	Min/Max range	Description	Factory defaults	Adj. during run
I82[1)]	A452	Brake open current	0~180 [%]	Sets current level to open the brake. It is set according to H33's (motor rated current) size	50.0	O
I83	A453	Brake open delay time	0~10 [s]	Sets Brake open delay time.	1.00	X
I84	A454	Brake open FX frequency	0~400 [Hz]	Sets FX frequency to open the brake	1.00	X
I85	A455	Brake open RX frequency	0~400 [Hz]	Sets RX frequency to open the brake	1.00	X
I86	A456	Brake close delay time	0~10 [s]	Sets delay time to close the brake	1.00	X
I87	A457	Brake close frequency	0~400 [Hz]	Sets frequency to close the brake	2.00	X
I88 [2)]	A458	Pulse output item select	0~3	0 Output frequency 1 Output current 2 Output voltage 3 Inverter DC Link voltage	0	O
I89	A459	Pulse output Gain select	0~100 [%]	This parameter sets the gains for the pulse output	100.0	O
I90	A460	Pulse input filter	0~9999 [ms]	Adjusts the responsiveness pulse input	10	O
I91	A461	Pulse input Min. frequency	0~50 [kHz]	Set the minimum frequency of the pulse input	0	O
I92	A462	Frequency corresponding To I91	0~60 [Hz]	Sets the inverter output minimum frequency at minimum pulse input	0	O
I93	A463	Pulse input Max. frequency	0~50 [kHz]	Set the maximum frequency of the pulse input	50.00	O
I94	A464	Frequency corresponding To I93	0~400 [Hz]	Sets the inverter output maximum frequency at maximum pulse input	60.00	O

1): It is indicated when choosing I54~I55 as a 19 (Brake signal).

2): It is indicated when choosing Frq as a 10 (Pulse train function).

MEMO

CHAPTER 6 - CONTROL BLOCK DIAGRAM

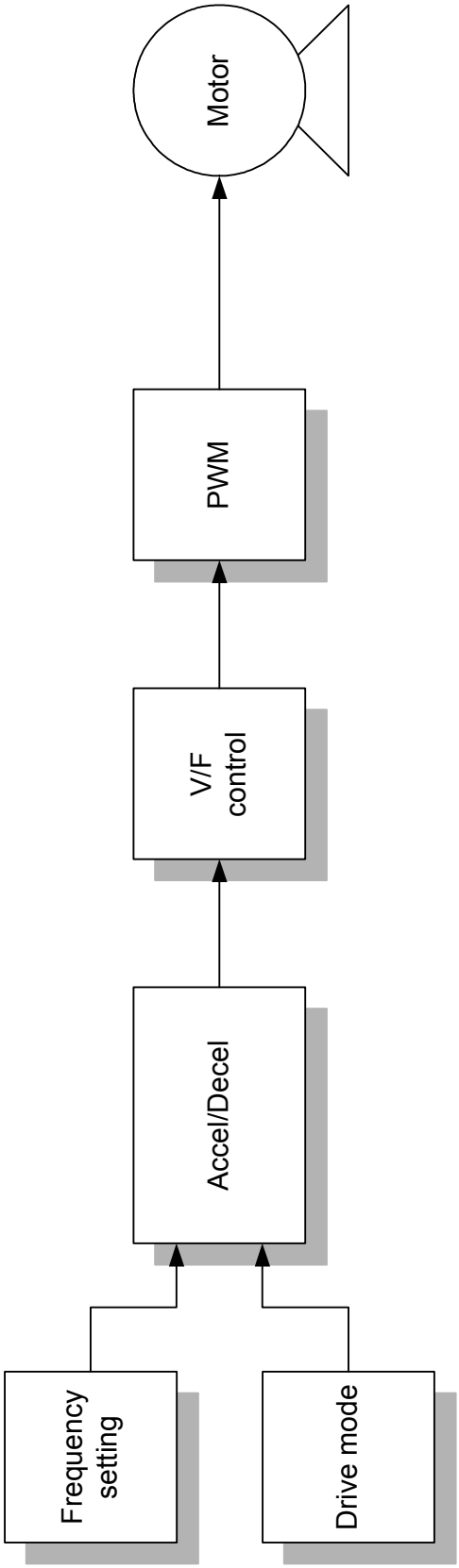

6.1 Frequency setting

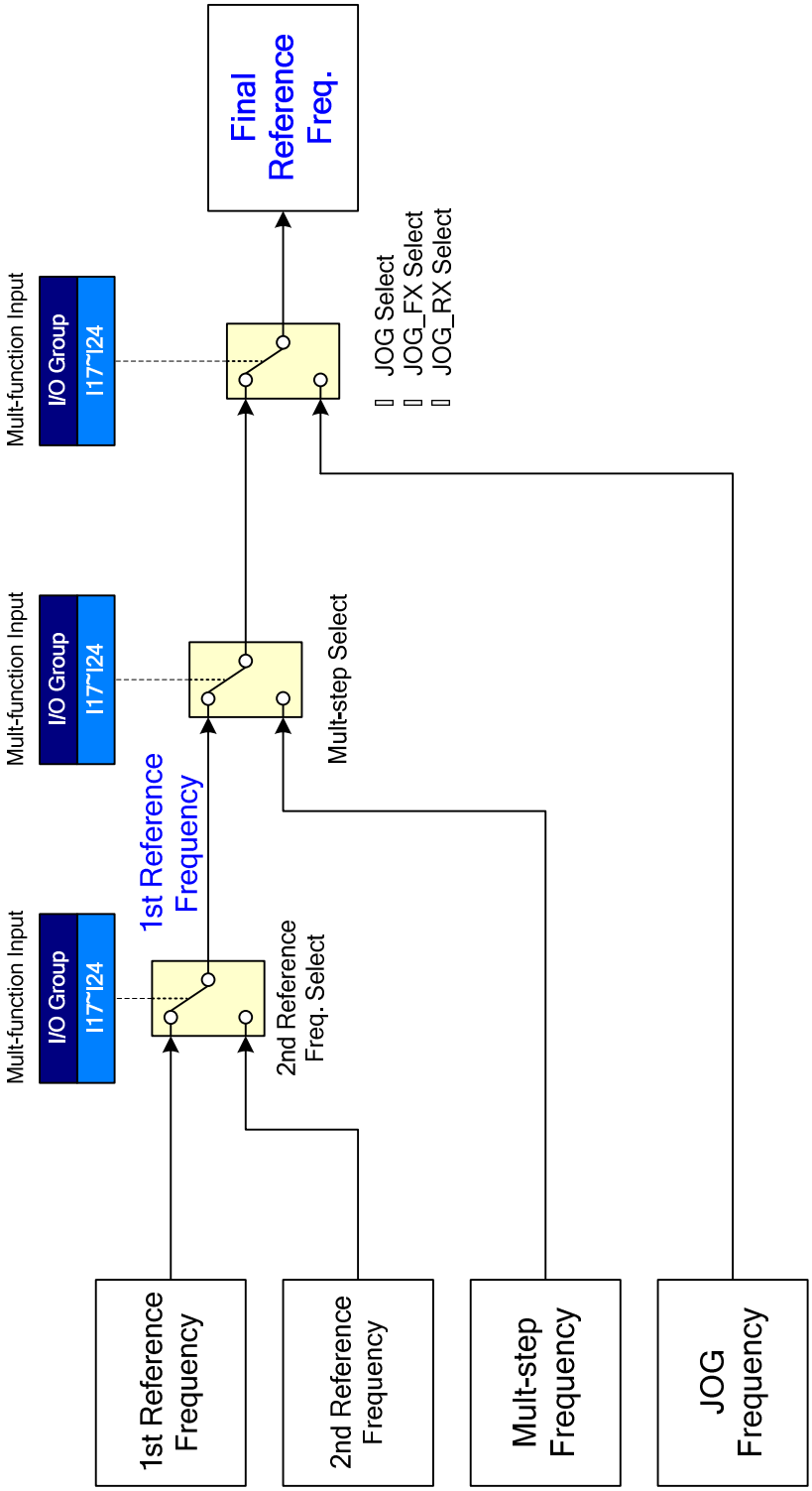

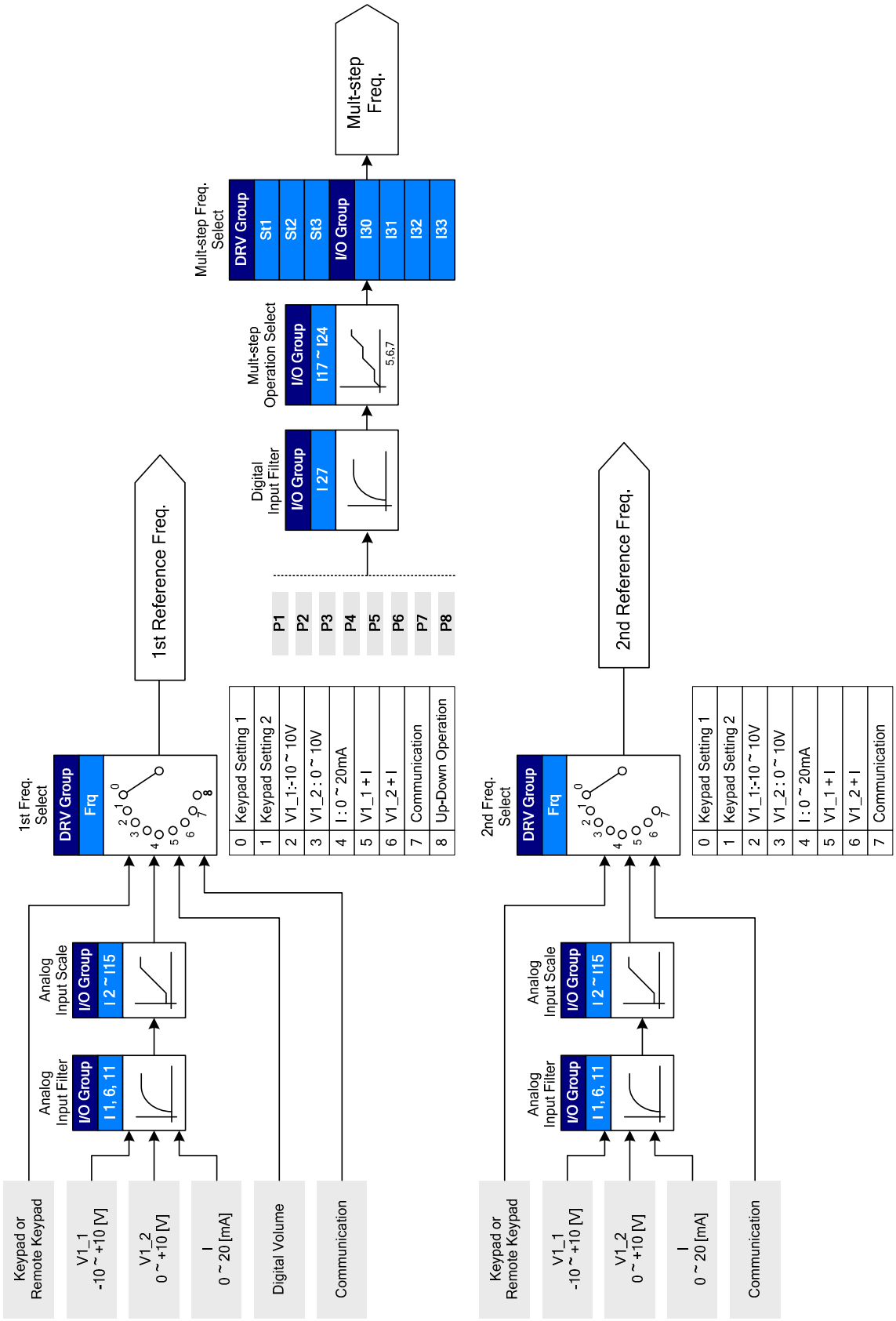
Mult-step Freq. Select
DRV Group
St1
St2
St3
I/O Group
I30
I31
I32
I33
Mult-step Freq.
Mult-step Operation Select
I/O Group
I17 ~ I24
5,6,7
Digital Input Filter
I/O Group
I 27
P1
P2
P3
P4
P5
P6
P7
P8
1st Reference Freq.
1st Freq. Select
DRV Group
Frq
0 Keypad Setting 1
1 Keypad Setting 2
2 V1_1:-10 ~ 10V
3 V1_2 : 0 ~ 10V
4 I : 0 ~ 20mA
5 V1_1 + I
6 V1_2 + I
7 Communication
8 Up-Down Operation
Analog Input Scale
I/O Group
I 2 ~ I15
Analog Input Filter
I/O Group
I 1, 6, 11
Keypad or Remote Keypad
V1_1 -10 ~ +10 [V]
V1_2 0 ~ +10 [V]
I 0 ~ 20 [mA]
Digital Volume
Communication
2nd Reference Freq.
2nd Freq. Select
DRV Group
Frq
0 Keypad Setting 1
1 Keypad Setting 2
2 V1_1:-10 ~ 10V
3 V1_2 : 0 ~ 10V
4 I : 0 ~ 20mA
5 V1_1 + I
6 V1_2 + I
7 Communication
Analog Input Scale
I/O Group
I 2 ~ I15
Analog Input Filter
I/O Group
I 1, 6, 11
Keypad or Remote Keypad
V1_1 -10 ~ +10 [V]
V1_2 0 ~ +10 [V]
I 0 ~ 20 [mA]
Communication

6.2 Drive command setting

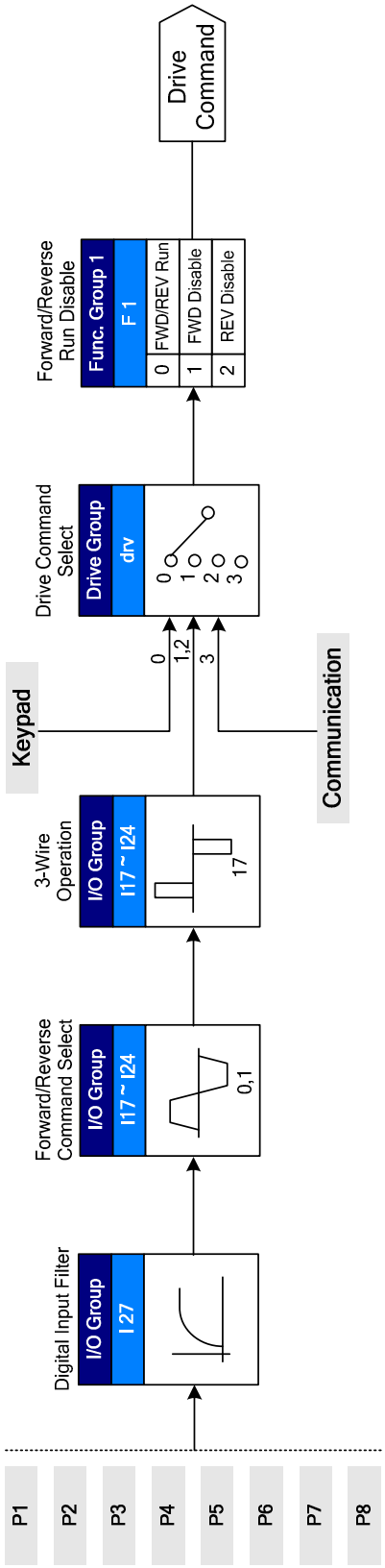

6.3 Accel/Decel setting and V/F control

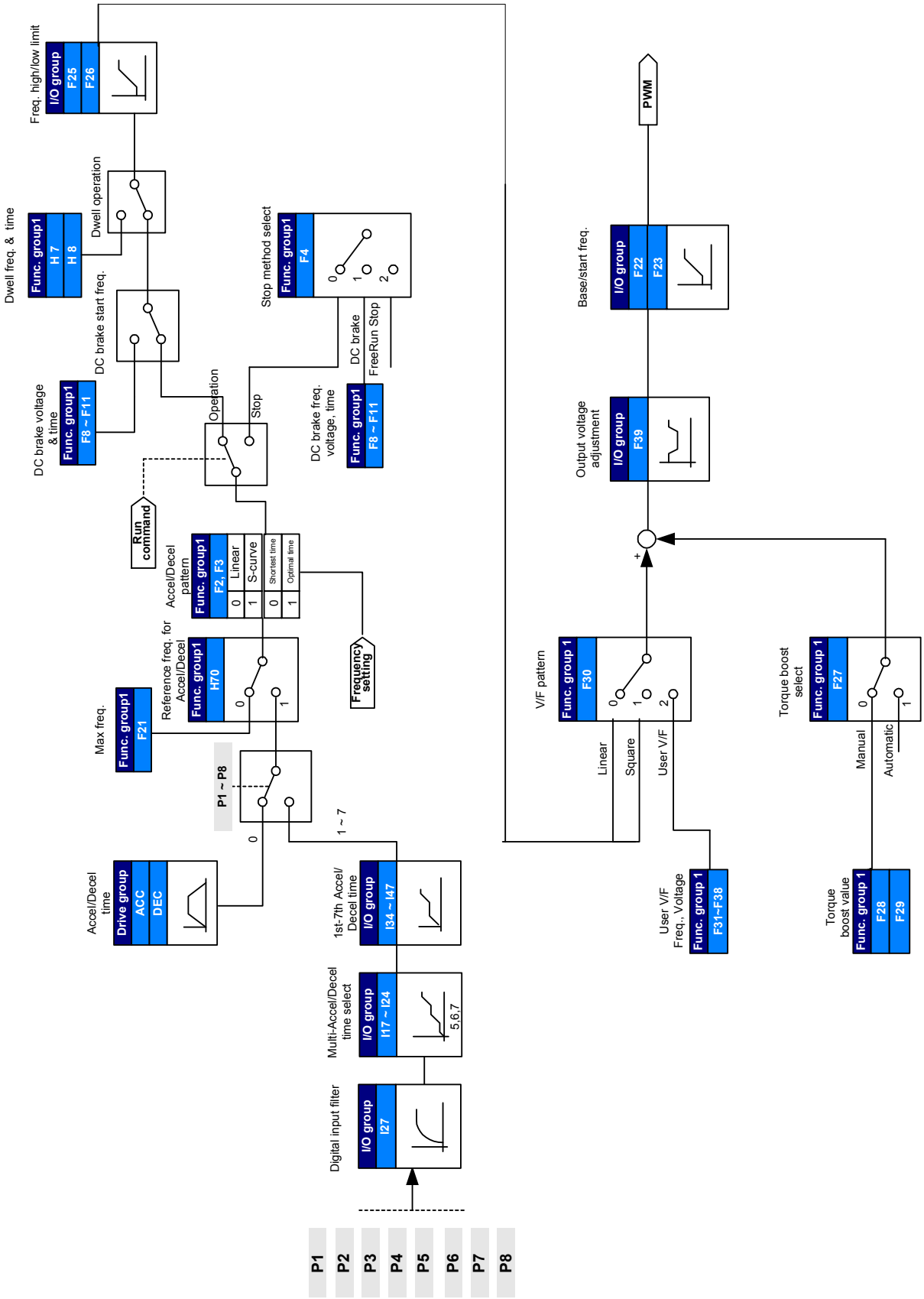

MEMO

CHAPTER 7 - TROUBLESHOOTING & MAINTENANCE

7.1 Protective functions.

⚠ WARNING

When a fault occurs, the cause must be corrected before the fault can be cleared. If protective function keeps active, it could lead to reduction in product life and damage to the equipment.

- Fault Display and information

Keypad display	Protective functions	Descriptions
OCt	Overcurrent	The inverter turns off its output when the output current of the inverter flows more than the inverter rated current.
OC2	Overcurrent2	When IGBT's Arm is short and output short occurs, the inverter turns off its output
GFt	Ground fault current	The inverter turns off its output when a ground fault occurs and the ground fault current is more than the internal setting value of the inverter.
IOL	Inverter Overload	The inverter turns off its output when the output current of the inverter flows more than the rated level (150% for 1 minute).
OLt	Overload trip	The inverter turns off its output if the output current of the inverter flows at 150% of the inverter rated current for more than the current limit time (1 min).
OHt	Inverter overheat	The inverter turns off its output if the heat sink overheats due to a damaged cooling fan or an alien substance in the cooling fan by detecting the temperature of the heat sink.
POt	Output Phase loss	The inverter turns off its output when the one or more of the output (U, V, W) phase is open. The inverter detects the output current to check the phase loss of the output.
Out	Over voltage	The inverter turns off its output if the DC voltage of the main circuit increases higher than 400 V when the motor decelerates. This fault can also occur due to a surge voltage generated at the power supply system.
Lvt	Low voltage	The inverter turns off its output if the DC voltage is below 180V because insufficient torque or overheating of the motor can occur when the input voltage of the inverter drops.
EtH	Electronic Thermal	The internal electronic thermal of the inverter determines the overheating of the motor. If the motor is overloaded the inverter turns off the output. The inverter cannot protect the motor when driving a motor having more than 4 poles or multi motors.
COL	Input phase loss	Inverter output is blocked when one of R, S, T is open or the electrolytic capacitor needs to be replaced.

- Fault Display and Information

Keypad display	Protective functions	Descriptions
FLtL	Self-diagnostic malfunction	Displayed when IGBT damage, output phase short, output phase ground fault or output phase open occurs.
EEP	Parameter save error	Displayed when user-setting parameters fails to be entered into memory.
H/W	Inverter hardware fault	Displayed when an error occurs in the control circuitry of the inverter.
Err	Communication Error	Displayed when the inverter cannot communicate with the keypad.
rErr	Remote keypad communication error	Displayed when inverter and remote keypad does not communicate each other. It does not stop Inverter operation.
CONn	Keypad error	Displayed after Inverter resets keypad when keypad error occurs and this status is maintained for a certain time.
FAn	Cooling fan fault	Displayed when a fault condition occurs in the inverter cooling fan.
EST	Instant cut off	Used for the emergency stop of the inverter. The inverter instantly turns off the output when the EST terminal is turned on. ⚠ **Caution** The inverter starts to regular operation when turning off the EST terminal while FX or RX terminal is ON.
EtA	External fault A contact input	When multi-function input terminal (I17-I24) is set to 18 {External fault signal input: A (Normal Open Contact)}, the inverter turns off the output.
Etb	External fault B contact input	When multi-function input terminal (I17-I24) is set to 19 {External fault signal input: B (Normal Close Contact)}, the inverter turns off the output.
_ _ L	Operating method when the frequency command is lost	When inverter operation is set via Analog input (0-10V or 0-20mA input) or option (RS485) and no signal is applied, operation is done according to the method set in I62 (Operating method when the frequency reference is lost).
ntC	NTC open	When NTC is not connected, outputs are cut off.
nbr	Brake control error	When Break control, if rating current flows below than set value, cut off the output without break open.
SFt	Safety Function error	Displayed when Safety status occurs in the control terminal SA,SB

7.2 Fault remedy

Keypad display	Cause	Remedy
OCt Overcurrent	⚠ Caution	
	When an overcurrent fault occurs, operation must be started after the cause is removed to avoid damage to IGBT inside the inverter.	
	Accel/Decel time is too short compared to the GD^2 of the load. Load is greater than the inverter rating. Inverter output is issued when the motor is free running. Output short circuit or ground fault has occurred. Mechanical brake of the motor is operating too fast.	☞ Increase the Accel/Decel time. ☞ Replace the inverter with appropriate capacity. ☞ Resume operation after stopping the motor or use H22 (Speed search). ☞ Check output wiring. ☞ Check the mechanical brake.
OC2 Overcurrent2	Short occurs between up and down of IGBT Inverter output short occurs. Accel/Decel time is very fast comparing with GD^2	☞ Check the IGBT. ☞ Check output Wring. ☞ Increase the Accel/Decel time.
GFt Ground fault current	Ground fault has occurred at the output wiring of the inverter The insulation of the motor is damaged due to heat	☞ Check the wiring of the output terminal. ☞ Replace the motor.
IOL Inverter overload OLt Overload trip	Load is greater than the inverter rating. Torque boost scale is set too large.	☞ Upgrade the capacity of motor and inverter or reduce the load weight. ☞ Reduce torque boost scale.
OHt Inverter overheat	Cooling system has faults. An old cooling fan is not replaced with a new one. Ambient temperature is too high.	☞ Check for alien substances clogged in the heat sink. ☞ Replace the old cooling fan with a new one. ☞ Keep ambient temperature under 50°C.
POt Output Phase loss	Faulty contact of magnetic switch at output Faulty output wiring	☞ Make connection of magnetic switch at output of the inverter securely. ☞ Check output wiring.
FAn Cooling fan fault	An alien substance is clogged in a ventilating slot. Inverter has been in use without changing a cooling fan.	☞ Check the ventilating slot and remove the clogged substances. ☞ Replace the cooling fan.

- Fault remedy

Keypad display	Cause	Remedy
Out Over voltage	Decel time is too short compared to the GD^2 of the load. Regenerative load is at the inverter output. Line voltage is too high.	☞ Increase the Decel time. ☞ Use Dynamic Brake Unit. ☞ Check whether line voltage exceeds its rating.
Lut Low voltage	Line voltage is low. Load larger than line capacity is connected to line (ex: welding machine, motor with high starting current connected to the commercial line). Faulty magnetic switch at the input side of the inverter.	☞ Check whether line voltage is below its rating. ☞ Check the incoming AC line. Adjust the line capacity corresponding to the load. ☞ Change a magnetic switch.
EtH Electronic thermal	Motor has overheated. Load is greater than inverter rating. ETH level is set too low. Inverter capacity is incorrectly selected. Inverter has been operated at low speed for too long.	☞ Reduce load weight and operating duty. ☞ Change inverter with higher capacity. ☞ Adjust ETH level to an appropriate level. ☞ Select correct inverter capacity. ☞ Install a cooling fan with a separate power supply.
EtA External fault A contact input	The terminal set to “18 (External fault-A)” or “19 (External fault-B)” in I20-I24 in I/O group is ON.	☞ Eliminate the cause of fault at circuit connected to external fault terminal or cause of external fault input.
Etb External fault B contact input		
..l Operating method when the frequency command is lost	No frequency command is applied to V1 and I.	☞ Check the wiring of V1 and I and frequency reference level.
rErr Remote keypad communication error	Communication error between inverter keypad and remote keypad	☞ Check for connection of communication line and connector.
nbr Brake control error	Break open current is not flow any more.	☞Check the Motor Capacity & Wiring

- Fault remedy

Protective functions & cause	Descriptions
EEP HWT Err COM nTC EEP : Parameter save error HWT : Hardware fault Err : Communication error COM : Keypad error NTC : NTC error rEEP : Remote Parameter save error	☞ Contact your local LSIS sales representative.

☞ **Overload Protection**

IOLT : IOLT(inverter Overload Trip) protection is activated at 150% of the inverter rated current for 1 minute and greater.

OLT : OLT is selected when F56 is set to 1 and activated at 200% of F57[Motor rated current] for 60 sec in F58. This can be programmable.

iG5A is not provided with “Overspeed Protection.”

7.3 Precautions for maintenance and inspection

⚠ WARNING

Make sure to remove the input power while performing maintenance.
Make sure to perform maintenance after checking the DC link capacitor has discharged. The bus capacitors in the inverter main circuit can still be charged even after the power is turned off. Check the voltage between terminal P or P1 and N using a tester before proceeding.
SV-iG5A series inverter has ESD (Electrostatic Discharge) sensitive components. Take protective measures against ESD before touching them for inspection or installation.
Do not change any inner parts and connectors. Never modify the inverter.

7.4 Check points

- Daily inspections
  - ✓ Proper installation environment
  - ✓ Cooling system fault
  - ✓ Unusual vibration and noise
  - ✓ Unusual overheating and discoloration
- Periodic inspection
  - ✓ Screws and bolts may become loose due to vibration, temperature changes, etc.
  - ✓ Check that they are tightened securely and retighten as necessary.
  - ✓ Alien substances are clogged in the cooling system.
  - ✓ Clean it using the air.
  - ✓ Check the rotating condition of the cooling fan, the condition of capacitors and the connections with the magnetic contactor.
  - ✓ Replace them if there are any abnormalities.

7.5 Part replacements

The inverter consists of many electronic parts such as semiconductor devices. The following parts may deteriorate with age because of their structures or physical characteristics, leading to reduced performance or failure of the inverter. For preventive maintenance, the parts must be changed periodically. The parts replacement guidelines are indicated in the following table. Lamps and other short-life parts must also be changed during periodic inspection.

Part name	Change period (unit: Year)	Description
Cooling fan	3	Exchange (as required)
DC link capacitor in main circuit	4	Exchange (as required)
Electrolytic capacitor on control board	4	Exchange (as required)
Relays	-	Exchange (as required)

CHAPTER 8 - SPECIFICATIONS

8.1 Technical data

- Input & output ratings: Three Phase 400V Class

SV ■■■ iG5A – 4 ■■		004	008	015	022	040
Max capacity[1]	[HP]	0.5	1	2	3	5.4
	[kW]	0.4	0.75	1.5	2.2	4.0
Output ratings	Capacity [kVA] [2]	0.95	1.9	3.0	4.5	6.9
	FLA [A] [3]	1.25	2.5	4	6	9
	Max Frequency	400 [Hz] [4]				
	Max Voltage	3Φ 380 ~ 480V [5]				
Input ratings	Rated Voltage	3Φ 380 ~ 480 VAC (+10%, -15%)				
	Rated Frequency	50 ~ 60 [Hz] (±5%)				
Cooling method		N/C[6]	Forced cooling			
Weight [kg]		1.13	1.14	1.54	2.32	2.37

1) Indicates the maximum applicable motor capacity when using a 4-pole standard motor.
2) Rated capacity is based on 440V for 400V class.
3) Refer to 8-3 when Carrier frequency setting (H39) is above 3kHz.
4) Max frequency setting range is extended to 300Hz when H40 (Control mode select) is set to 3 (Sensorless vector control).
5) Maximum output voltage cannot be higher than the input voltage. It can be programmable below input voltage.
6) N/C: Natural Convention

- Control

Control method		V/F, Sensorless vector control
Frequency setting resolution		Digital command: 0.01Hz Analog command: 0.06Hz (Max freq.: 60Hz)
Frequency accuracy		Digital command: 0.01% of Max output frequency Analog command: 0.1% of Max output frequency
V/F pattern		Linear, Squared, User V/F
Overload capacity		150% per 1 min.
Torque boost		Manual/Auto torque boost
Dynamic Braking	Max braking torque	20% [1]
	Time/%ED	150% [2] when using optional DB resistor

1) Means average braking torque during Decel to stop of a motor.
2) Refer to page 8-6 for DB resistor specification.

● Operation

Operation mode		Keypad/ Terminal/ Communication option/ Remote keypad selectable	
Frequency setting		Analog: 0 ~ 10[V], -10 ~ 10[V], 0 ~ 20[mA] Digital: Keypad	
Operation features		PID, Up-down, 3-wire	
Input	Multi-function terminal P1 ~ P6	NPN / PNP selectable (See page 2-11)	
		FWD/REV RUN, Emergency stop, Fault reset, Jog operation, Multi-step Frequency-High, Mid, Low, Multi-step Accel/Decel-High, Mid, Low, DC braking at stop, 2nd motor select, Frequency UP/Down, 3-wire operation, External trip A, B, PID-Inverter (v/f) operation bypass, Option-inverter (v/f) operation bypass, 2nd Source, Analog Hold, Accel/Decel stop, Up/Down Save Freq, Jog FX/RX	
Output	Open collector terminal	Fault output and inverter status output	Less than DC 24V 50mA
	Multi-function relay		(N.O., N.C.) Less than AC250V 1A, Less than DC 30V 1A
	Analog output	0 ~ 10 Vdc (less than10mA): Output Freq, Output Current, Output Voltage, DC link selectable	

● Protective function

Trip	Over Voltage, Under Voltage, Over Current, Over Current 2, Ground Fault current detection, Inverter Overheat, Motor Overheat, Output Phase Open, Overload Protection, Communication Error, Loss of Speed Command, Hardware Fault, Fan trip, Brake error, Safety function
Alarm	Stall prevention, overload
Momentary Power Loss	Below 15 msec: Continuous operation (should be within rated input voltage, rated output power.) Above 15 msec: Auto restart enable

● Environment

Protection degree	IP 20, UL Enclosure(ENC) type1 (Ambient Temperature 40 °C) [1)]
Ambient temp	-10°C ~ 50°C
Storage temp	-20°C ~ 65°C
Humidity	Below 90% RH (no condensation)
Altitude/Vibration	Below 1,000m, 5.9m/sec^2 (0.6G)
Atmospheric pressure	70~106 kPa
Location	Protected from corrosive gas, combustible gas, oil mist or dust Pollution Degree 2 Environment

1) UL Enclosure(ENC) type1 with top cover and conduit box installed.

8.2 Temperature Derating Information

- Load and ambient temperature classified by the Carrier Frequency

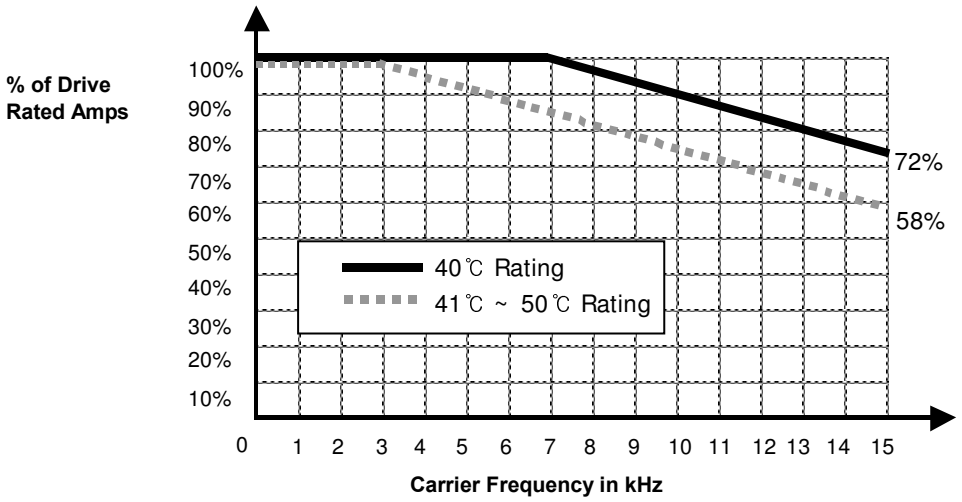

⚠ Caution
1) The above graph is only applied when the inverter is operated in the allowable temperature. Pay attention to the air cooling when the inverter is installed in a panel box, and the inside temperature should be within an allowable temperature range. 2) This derating curve is based on inverter current rating when rated motor is connected.

8.3 Remote option

- Parts

1) Remote Keypad

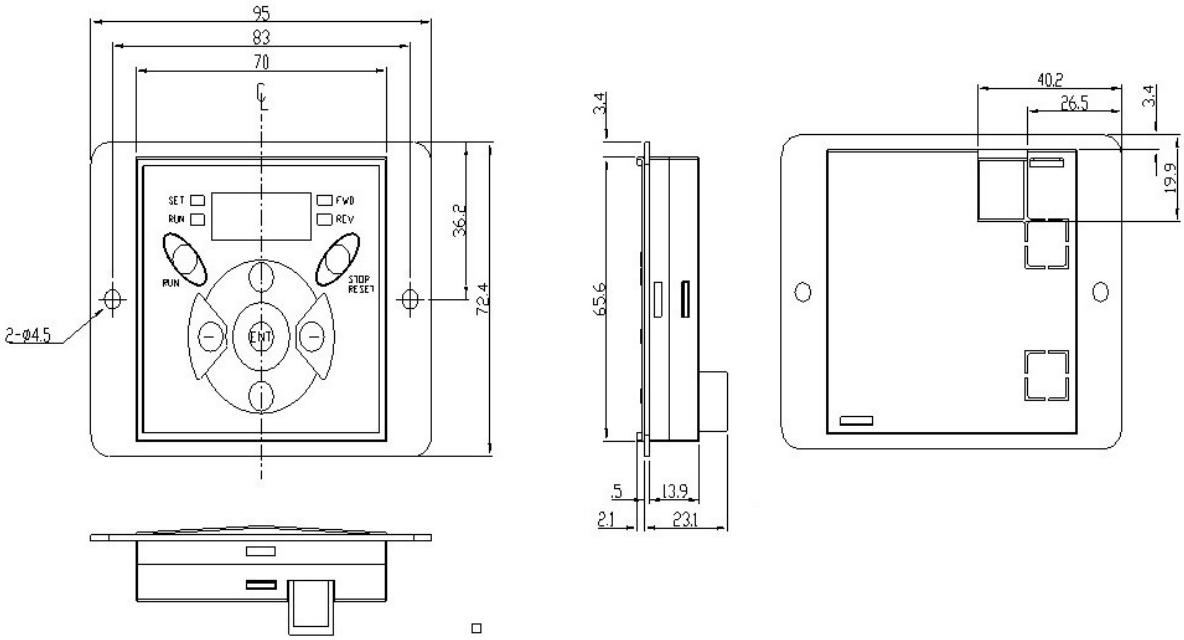

2) Remote Cable (1M, 2M, 3M, 5M)

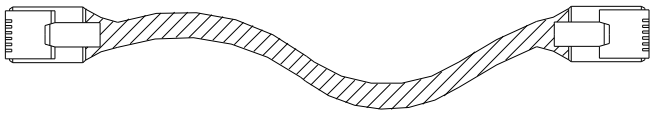

- Remote Cable Model Number

Model number	Specification
64100022	INV, REMOTE 1M (SV-iG5A)
64100001	INV, REMOTE 2M (SV-iG5A)
64100002	INV, REMOTE 3M (SV-iG5A)
64100003	INV, REMOTE 5M (SV-iG5A)

- Installation

1) Take off the top cover of the I/O board kit and remove the hole cover to connect remote cable on the side.

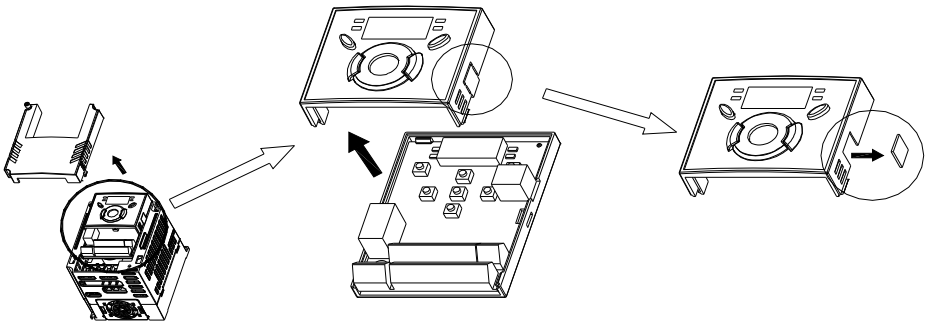

2) Attach the top cover of the I/O board kit and connect the remote cable as shown below.

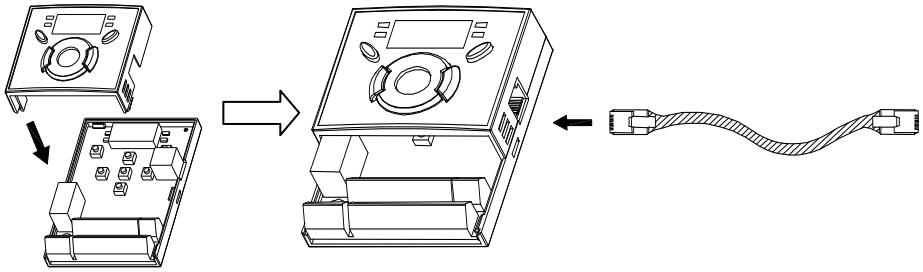

3) Connect the other side of the remote cable to the remote keypad as shown below.

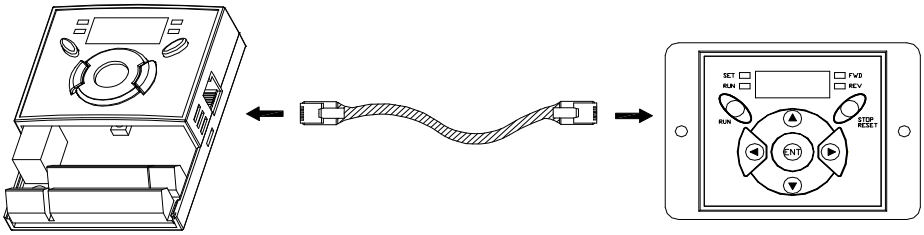

⚠ CAUTION

- Without Parameter Read(H91), Parameter Write(H92) is not available since the Remote memory is empty when the Remote keypad is first used.
- Do not use the remote cable other than standard LS'. Otherwise, malfunction may occur due to noise input or voltage drop in the keypad.
- Check for disconnection of the communication cable and/or poor cable connection if "----" is displayed on the 7-segment display of the Remote keypad.
- When Parameter Read(H91) is executed, "rd"(Read) and "wr"(Verifiy) is displayed successively on the 7-segment display of the Remote keypad. On the other hand, when Parameter Write(H92) is executed, "wr"(Write) is displayed only.

8.4 Conduit Kit

● Installation

1) SV004IG5A-4, SV008IG5A-4, SV015IG5A-4, SV022IG5A-4, SV040IG5A-4

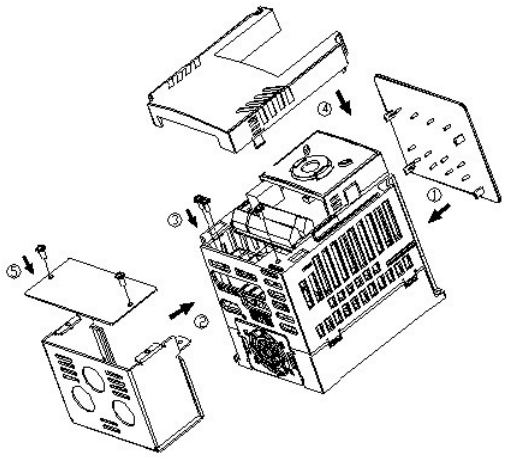

● Conduit Kit

Conduit Kit	Model
Inverter Conduit Kit 1	SV004IG5A-4, SV008IG5A-4
Inverter Conduit Kit 2	SV015IG5A-4
Inverter Conduit Kit 3	SV022IG5A-4, SV040IG5A-4

8.5 Braking resistor

Input Voltage	Inverter capacity [kW]	100 % braking		150% braking	
		[Ω]	[W]*	[Ω]	[W]*
400V	0.4	1800	50	1200	100
	0.75	900	100	600	150
	1.5	450	200	300	300
	2.2	300	300	200	400
	4.0	200	500	130	600

* The wattage is based on Enable duty (%ED) 5% with continuous braking time 15 sec.

8.6 Field bus Communication Module

● iG5A European model for Communication

1) Please refer to 'Installation of communication module' in user's manual for installation for communication module.
2) iG5A for communication has been designed to install the communication module easily.
3) Production name of communication type is as follows.
   <Production name of communication type>

SV	xxx	iG5A	-	4	ENC
LS Inverter	Capacity Note1)	Type	-	Input Voltage Note2)	iG5A for Communication

Note 1) The capacity range is applied from 0.4 to 4.0 kW products.
Note 2) Input Voltage is classified as 4 (Three phase 400V class).

Remark

- To use the communication module for iG5A, you must be use the iG5A European model for communication.
- The name of iG5A European model for communication is indicated as 'ENC'.
- PROFIBUS function supports above the iG5A for communication's version of software 1.1

● CANopen / PROFIBUS Communication Module

1) Please use user's manual contained in package for using communication module.
2) Product code

Product Code	Product Name
64100023EU	IG5A CANopen Module for Europe
64100021EU	IG5A PROFIBUS Module for Europe

DECLARATION OF CONFORMITY

Appendix A : European Standards

We, the undersigned,

Representative: **LSIS Co., Ltd.**
Address: **LS Tower, Hogye-dong, Dongan-gu, Anyang-si, Gyeonggi-do 1026-6, Korea**

Manufacturer: **LSIS Co., Ltd.**
Address: **181, Samsung-ri, Mokchon-Eup, Chonan, Chungnam, 330-845, Korea**

Certify and declare under our sole responsibility that the following apparatus:

Type of Equipment: **Inverter (Power Conversion Equipment)**
Model Name: **STARVERT-iG5A series**
Trade Mark: **LSIS Co., Ltd.**

conforms with the essential requirements of the directives:

2006/95/EC Directive of the European Parliament and of the Council on the harmonisation of the laws of Member States relating to Electrical Equipment designed for use within certain voltage limits
2004/108/EC Directive of the European Parliament and of the Council on the approximation of the laws of the Member States relating to electromagnetic compatibility

based on the following specifications applied:

EN 61800-3:2004
EN 61800-5-1:2007

and therefore complies with the essential requirements and provisions of the 2006/95/CE and 2004/108/CE Directives.

Place: **Chonan, Chungnam, Korea**

최 인 식 2012. 7. 3 (Signature /Date)

Mr. In Sik Choi / General Manager
(Full name / Position)

Appendix B : Safe Disable Input Functions

Warranty

Maker	LS Industrial Systems Co., Ltd.	Installation (Start-up) Date	
Model No.	SV-iG5A	Warranty Period	
Customer Information	Name		
	Address		
	Tel.		
Sales Office (Distributor)	Name		
	Address		
	Tel.		

Warranty period is 12 months after installation or 18 months after manufactured when the installation date is unidentified. However, the guarantee term may vary on the sales term.

IN-WARRANTY service information

If the defective part has been identified under normal and proper use within the guarantee term, contact your local authorized LS distributor or LS Service center.

OUT-OF WARRANTY service information

The guarantee will not apply in the following cases, even if the guarantee term has not expired.

- Damage was caused by misuse, negligence or accident.
- Damage was caused by abnormal voltage and peripheral devices' malfunction (failure).
- Damage was caused by an earthquake, fire, flooding, lightning, or other natural calamities.
- When LS nameplate is not attached.
- When the warranty period has expired.

Revision History

No	Date	Edition	Changes
1	2010. 1	First Release	Only 0.4~4.0kW included
2	2011. 2	2nd Edition	S/W Version up V1.1(PROFIBUS)
3	2012. 12	3nd Edition	DECLARATION OF CONFORMITY